YORK®
Heating and Air Conditioning

TECHNICAL GUIDE

SINGLE PACKAGE HEAT PUMP UNITS

BP 072

6 NOMINAL TONS

ASHRAE 90.1-2001 COMPLIANT

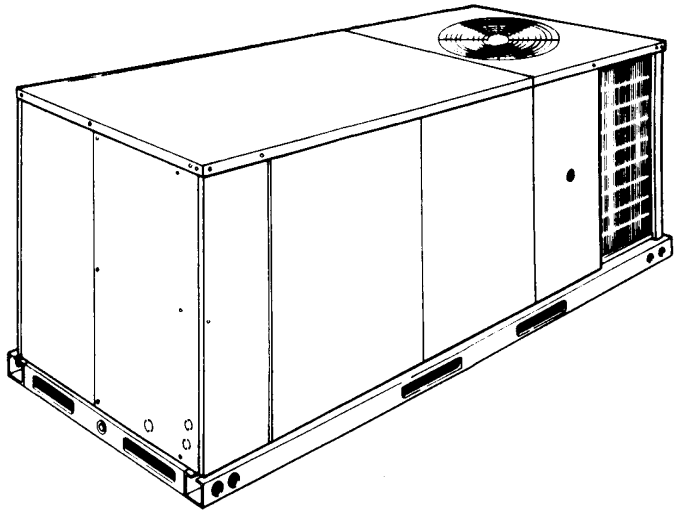

DESCRIPTION

YORK Sunline 2000™ heat pumps are convertible single package units with a common cabinet and a common roof curb for the 3-6 ton sizes. The units were designed for light commercial and commercial applications. They can easily be installed on a roof curb, slab, roof jack or frame.

All units include:

- Powder Paint finish that meets ASTM-B-117 750 hour salt spray standards
- Permanently lubricated motors
- Bottom or side air discharge configuration capability (field convertible)
- Manufactured under the quality standards of ISO9001
- Simplicity® Control Board
- Copper tube/aluminum fin coils
- Easy access to all components
- Rigging holes in base rails for lifting
- Fork lift slots on three sides
- Single point power connection
- Complete factory package - tested, charged and wired
- CSA agency listing on all units

WARRANTY

- Factory Limited Parts Warranty
- One-year parts warranty
- A Five-year parts warranty on the compressor and electric heat elements.

TABLE OF CONTENTS

DESCRIPTION 1

PRODUCT NOMENCLATURE 3

FEATURES 11

FACTORY-INSTALLED OPTIONS 12

FIELD-INSTALLED ACCESSORIES 13

GUIDE SPECIFICATIONS 29

LIST OF FIGURES

Fig. # Pg. #

1 UNIT CUTAWAY 12
2 TYPICAL FIELD POWER & CONTROL WIRING 23
3 UNIT DIMENSIONS - FRONT VIEW 24
4 UNIT WITH ECONOMIZER RAINHOOD 24
5 UNIT WITH FIXED OUTDOOR AIR/MOTORIZED DAMPER RAINHOOD 25
6 UNIT DIMENSIONS (REAR VIEW) 25
7 DISCONNECT/BLOWER ACCESS LOCATION. 26
8 TYPICAL APPLICATIONS 27
9 FOUR AND SIX POINT LOADING 28
10 ROOF CURB DIMENSIONS 29

LIST OF TABLES

Tbl. # Pg. #

1 SOUND POWER RATING 15
2 CAPACITY RATINGS 15
3 BP072 COOLING CAPACITIES (6 TON) 16
4 BP072 HEATING CAPACITIES 18
5 SUPPLY AIR BLOWER PERFORMANCE (6 TON BELT DRIVE) - SIDE DUCT APPLICATION 18
6 BELT DRIVE BLOWER MOTOR AND DRIVE DATA. . 19
7 STATIC RESISTANCES 19
8 ELECTRIC HEATER CFM LIMITATIONS 19
9 BP 072 ELECTRICAL DATA BELT DRIVE WITHOUT POWERED CONVENIENCE OUTLET 20
10 BP 072 ELECTRICAL DATA BELT DRIVE WITH POWERED CONVENIENCE OUTLET 21
11 PHYSICAL DATA 22
12 ELECTRIC HEAT CORRECTION FACTORS 22
13 VOLTAGE LIMITATIONS 22
14 UTILITIES ENTRY 26
15 MINIMUM CLEARANCES 26
16 BP 4 POINT LOADS WEIGHT DISTRIBUTION 28
17 BP 6 POINT LOADS WEIGHT DISTRIBUTION 28
18 CENTER OF GRAVITY 28
19 OPERATING WEIGHTS (LBS.) 28

PRODUCT NOMENCLATURE

6 Ton Sunline Model Number Nomenclature

B	P	072	C00	A	2	A	AA	1

Product Category

B = Heat Pump, Single Package

Product Identifier

P = R-22 Hi. Effic. Heat Pump

Nominal Cooling Capacity - MBH

072 = 6 Ton

Heat Type & Nominal Heat Capacity

C00 = Cooling Only. Suitable for field installed electric heat

Electric Heat Options

E05 = 5 kW Electric Heat
E07 = 7 kW Electric Heat
E10 = 10 kW Electric Heat
E15 = 15 kW Electric Heat
E20 = 20 kW Electric Heat
E30 = 30 kW Electric Heat

Voltage

2 = 208/230-3-60
4 = 460-3-60
5 = 575-3-60

Installation Options

A = No Options Installed
B = Option 1
C = Option 2
D = Options 1 & 2
E = Option 3
F = Option 4
G = Options 1 & 3
H = Options 1 & 4
J = Options 1, 2 & 3
K = Options 1, 2, & 4
L = Options 1,3 & 4
M = Options 1, 2, 3, & 4
N = Options 2 & 3
P = Options 2 & 4
Q = Options 2, 3, & 4
R = Options 3 & 4
S = Option 5
T = Options 1 & 5
U = Options 1, 3, & 5
V = Options 1, 4, & 5
W = Options 1, 3, 4, & 5
X = Options 3 & 5
Y = Options 4 & 5
Z = Options 3, 4, & 5

Options

1 = Disconnect
2 = Non-Pwr'd Conv Oultet
3 = Smoke Detector S.A.
4 = Smoke Detector R.A.
5 = Pwr'd Conv. Outlet

Additional Options

(See Next Page)

Product Generation

1 = First Generation

Airflow

N = Belt Drive
P = Belt Drive/Single Input Econo
R = Belt Drive/Motorized Damper
Y = Belt Drive/BAS Ready Econ (No BAS Controller) w/2" Pleated Filters

PRODUCT NOMENCLATURE - Continued

6T Sunline Model Number Nomenclature

Standard Cabinet	
AA	None
AB	Phase Monitor
AC	Coil Guard
AD	Dirty Filter Switch
AE	Phase Monitor & Coil Guard
AF	Phase Monitor & Dirty Filter Switch
AG	Coil Guard & Dirty Filter Switch
AH	Phase Monitor, Coil Guard, & Dirty Filter Switch
AJ	SS Drain Pan
AK	SS Drain Pan & Phase Monitor
AL	SS Drain Pan & Coil Guard
AM	SS Drain Pan & Dirty Filter Switch
AN	SS Drain Pan, Phase Monitor, Coil Guard & Dirty Filter Switch
AS	Bottom Drain Connection
CA	CPC Controller with Dirty Filter Switch & Air Proving Switch
CB	CPC Controller, DFS, APS & Phase Monitor
CC	CPC Controller, DFS, APS & Coil Guard
CD	CPC Controller, DFS, APS, Phase Monitor, & Coil Guard
CE	CPC Controller, DFS, APS & Technicoat Cond. Coil
CF	CPC Controller, DFS, APS, Technicoat Cond. Coil, & Phase Monitor
CG	CPC Controller, DFS, APS, Technicoat Cond. Coil, & Coil Guard
CH	CPC Controller, DFS, APS, Technicoat Cond. Coil, Phase Monitor, & Coil Guard
CJ	CPC Controller, DFS, APS & Technicoat Evap. Coil
CK	CPC Controller, DFS, APS, Technicoat Evap. Coil, & Phase Monitor
CL	CPC Controller, DFS, APS, Technicoat Evap. Coil, & Coil Guard
CM	CPC Controller, DFS, APS, Technicoat Evap. Coil, Phase Monitor, & Coil Guard
CN	CPC Controller, DFS, APS & Technicoat Evap. & Cond Coils
CP	CPC Controller, DFS, APS, Technicoat Evap. & Cond Coils, & Phase Monitor
CQ	CPC Controller, DFS, APS, Technicoat Evap. & Cond Coils, & Coil Guard
CR	CPC Controller, DFS, APS, Technicoat Evap. & Cond Coils, Phase Monitor, & Coil Guard
CS	CPC Controller, DFS, APS, SS Drain Pan
CT	CPC Controller, DFS, APS, SS Drain Pan, Phase Monitor, & Coil Guard
CU	CPC Controller, DFS, APS, SS Drain Pan, & Technicoat Cond Coils
CV	CPC Controller, DFS, APS, SS Drain Pan, & Technicoat Evap Coil
CW	CPC Controller, DFS, APS, SS Drain Pan, & Technicoat Evap and Cond Coils
CX	CPC Controller, DFS, APS, SS Drain Pan, Phase Monitor, Coil Guard, & Technicoat Evap and Cond Coils
JA	Johnson UNT Controller with Dirty Filter Switch & Air Proving Switch
JB	Johnson UNT Controller, DFS, APS & Phase Monitor
JC	Johnson UNT Controller, DFS, APS & Coil Guard
JD	Johnson UNT Controller, DFS, APS, Phase Monitor, & Coil Guard
JE	Johnson UNT Controller, DFS, APS & Technicoat Cond. Coil
JF	Johnson UNT Controller, DFS, APS, Technicoat Cond. Coil, & Phase Monitor
JG	Johnson UNT Controller, DFS, APS, Technicoat Cond. Coil, & Coil Guard
JH	Johnson UNT Controller, DFS, APS, Technicoat Cond. Coil, Phase Monitor, & Coil Guard
JJ	Johnson UNT Controller, DFS, APS & Technicoat Evap. Coil
JK	Johnson UNT Controller, DFS, APS, Technicoat Evap. Coil, & Phase Monitor
JL	Johnson UNT Controller, DFS, APS, Technicoat Evap. Coil, & Coil Guard
JM	Johnson UNT Controller, DFS, APS, Technicoat Evap. Coil, Phase Monitor, & Coil Guard
JN	Johnson UNT Controller, DFS, APS & Technicoat Evap. & Cond Coils
JP	Johnson UNT Controller, DFS, APS, Technicoat Evap. & Cond Coils, & Phase Monitor
JQ	Johnson UNT Controller, DFS, APS, Technicoat Evap. & Cond Coils, & Coil Guard

Standard Cabinet	
JR	Johnson UNT Controller, DFS, APS, Technicoat Evap. & Cond Coils, Phase Monitor, & Coil Guard
JS	Johnson UNT Controller, DFS, APS, SS Drain Pan
JT	Johnson UNT Controller, DFS, APS, SS Drain Pan, Phase Monitor, & Coil Guard
JU	Johnson UNT Controller, DFS, APS, SS Drain Pan, & Technicoat Cond Coils
JV	Johnson UNT Controller, DFS, APS, SS Drain Pan, & Technicoat Evap Coil
JW	Johnson UNT Controller, DFS, APS, SS Drain Pan, & Technicoat Evap and Cond Coils
JX	Johnson UNT Controller, DFS, APS, SS Drain Pan, Phase Monitor, Coil Guard, & Technicoat Evap and Cond Coils
HA	Honeywell Excel 10 Controller with Dirty Filter Switch & Air Proving Switch
HB	Honeywell Excel 10 Controller, DFS, APS & Phase Monitor
HC	Honeywell Excel 10 Controller, DFS, APS & Coil Guard
HD	Honeywell Excel 10 Controller, DFS, APS, Phase Monitor, & Coil Guard
HE	Honeywell Excel 10 Controller, DFS, APS & Technicoat Cond. Coil
HF	Honeywell Excel 10 Controller, DFS, APS, Technicoat Cond. Coil, & Phase Monitor
HG	Honeywell Excel 10 Controller, DFS, APS, Technicoat Cond. Coil, & Coil Guard
HH	Honeywell Excel 10 Controller, DFS, APS, Technicoat Cond. Coil, Phase Monitor, & Coil Guard
HJ	Honeywell Excel 10 Controller, DFS, APS & Technicoat Evap. Coil
HK	Honeywell Excel 10 Controller, DFS, APS, Technicoat Evap. Coil, & Phase Monitor
HL	Honeywell Excel 10 Controller, DFS, APS, Technicoat Evap. Coil, & Coil Guard
HM	Honeywell Excel 10 Controller, DFS, APS, Technicoat Evap. Coil, Phase Monitor, & Coil Guard
HN	Honeywell Excel 10 Controller, DFS, APS & Technicoat Evap. & Cond Coils
HP	Honeywell Excel 10 Controller, DFS, APS, Technicoat Evap. & Cond Coils, & Phase Monitor
HQ	Honeywell Excel 10 Controller, DFS, APS, Technicoat Evap. & Cond Coils, & Coil Guard
HR	Honeywell Excel 10 Controller, DFS, APS, Technicoat Evap. & Cond Coils, Phase Monitor, & Coil Guard
HS	Honeywell Excel 10 Controller, DFS, APS, SS Drain Pan
HT	Honeywell Excel 10 Controller, DFS, APS, SS Drain Pan, Phase Monitor, & Coil Guard
HU	Honeywell Excel 10 Controller, DFS, APS, SS Drain Pan, & Technicoat Cond Coils
HV	Honeywell Excel 10 Controller,DFS, APS, SS Drain Pan, & Technicoat Evap Coil
HW	Honeywell Excel 10 Controller,DFS, APS, SS Drain Pan, & Technicoat Evap and Cond Coils
HX	Honeywell Excel 10 Controller,DFS, APS, SS Drain Pan, Phase Monitor, Coil Guard, & Technicoat Evap and Cond Coils
NA	Novar ETC-3 Controller with Dirty Filter Switch & Air Proving Switch
NB	Novar ETC-3 Controller, DFS, APS & Phase Monitor
NC	Novar ETC-3 Controller, DFS, APS & Coil Guard
ND	Novar ETC-3 Controller, DFS, APS, Phase Monitor, & Coil Guard
NE	Novar ETC-3 Controller, DFS, APS & Technicoat Cond. Coil
NF	Novar ETC-3 Controller, DFS, APS, Technicoat Cond. Coil, & Phase Monitor
NG	Novar ETC-3 Controller, DFS, APS, Technicoat Cond. Coil, & Coil Guard
NH	Novar ETC-3 Controller, DFS, APS, Technicoat Cond. Coil, Phase Monitor, & Coil Guard
NJ	Novar ETC-3 Controller, DFS, APS & Technicoat Evap. Coil
NK	Novar ETC-3 Controller, DFS, APS, Technicoat Evap. Coil, & Phase Monitor
NL	Novar ETC-3 Controller, DFS, APS, Technicoat Evap. Coil, & Coil Guard
NM	Novar ETC-3 Controller, DFS, APS, Technicoat Evap. Coil, Phase Monitor, & Coil Guard
NN	Novar ETC-3 Controller, DFS, APS & Technicoat Evap. & Cond Coils
NP	Novar ETC-3 Controller, DFS, APS, Technicoat Evap. & Cond Coils, & Phase Monitor
NQ	Novar ETC-3 Controller, DFS, APS, Technicoat Evap. & Cond Coils, & Coil Guard
NR	Novar ETC-3 Controller, DFS, APS, Technicoat Evap. & Cond Coils, Phase Monitor, & Coil Guard
NS	Novar ETC-3 Controller, DFS, APS, SS Drain Pan
NT	Novar ETC-3 Controller, DFS, APS, SS Drain Pan, Phase Monitor, & Coil Guard
NU	Novar ETC-3 Controller, DFS, APS, SS Drain Pan, & Technicoat Cond Coils
NV	Novar ETC-3 Controller, DFS, APS, SS Drain Pan, & Technicoat Evap Coil
NW	Novar ETC-3, DFS, APS, SS Drain Pan, & Technicoat Evap and Cond Coils
NX	Novar ETC-3 Controller, DFS, APS, SS Drain Pan, Phase Monitor, Coil Guard, & Technicoat Evap and Cond Coils
TA	Technicoat Condenser Coil
TB	Technicoat Condenser Coil & Phase Monitor
TC	Technicoat Condenser Coil & Coil Guard

Standard Cabinet	
TD	Technicoat Condenser Coil & Dirty Filter Switch
TE	Technicoat Condenser Coil, Phase Monitor, & Coil Guard
TF	Technicoat Condenser Coil, Phase Monitor, & Dirty Filter Switch
TG	Technicoat Condenser Coil, Coil Guard, & Dirty Filter Switch
TH	Technicoat Condenser Coil, Phase Monitor, Coil Guard, & Dirty Filter Switch
TJ	Technicoat Evaporator Coil
TK	Technicoat Evaporator Coil & Phase Monitor
TL	Technicoat Evaporator Coil & Coil Guard
TM	Technicoat Evaporator Coil & Dirty Filter Switch
TN	Technicoat Evaporator Coil, Phase Monitor, & Coil Guard
TP	Technicoat Evaporator Coil, Phase Monitor, & Dirty Filter Switch
TQ	Technicoat Evaporator Coil, Coil Guard, & Dirty Filter Switch
TR	Technicoat Evaporator Coil, Phase Monitor, Coil Guard, & Dirty Filter Switch
TS	Technicoat Evaporator & Condenser Coils
TT	Technicoat Evaporator & Condenser Coils & Phase Monitor
TU	Technicoat Evaporator & Condenser Coils & Coil Guard
TV	Technicoat Evaporator & Condenser Coils & Dirty Filter Switch
TW	Technicoat Evaporator & Condenser Coils, Phase Monitor, & Coil Guard
TX	Technicoat Evaporator & Condenser Coils, Phase Monitor, & Dirty Filter Switch
TY	Technicoat Evaporator & Condenser Coils, Coil Guard, & Dirty Filter Switch
TZ	Technicoat Evaporator & Condenser Coils, Phase Monitor, Coil Guard, & Dirty Filter Switch
T1	Technicoat Condenser & SS Drain Pan
T3	Technicoat Condenser Coil, SS Drain Pan, Phase Monitor, Coil Guard, & Dirty Filter Switch
T4	Technicoat Evaporator & SS Drain Pan
T6	Technicoat Evaporator Coil, SS Drain Pan, Phase Monitor, Coil Guard, & Dirty Filter Switch
T7	Technicoat Evaporator & Condenser Coils & SS Drain Pan
T9	Technicoat Evaporator & Condenser Coils, SS Drain Pan, Phase Monitor, Coil Guard, & Dirty Filter Switch
LA	Simplicity Intelli-Comfort Controller
LB	Simplicity Intelli-Comfort Controller, & Phase Monitor
LC	Simplicity Intelli-Comfort Controller, & Coil Guard
LD	Simplicity Intelli-Comfort Controller, Phase Monitor, & Coil Guard
LE	Simplicity Intelli-Comfort Controller, & Technicoat Cond. Coil
LF	Simplicity Intelli-Comfort Controller, Technicoat Cond. Coil, & Phase Monitor
LG	Simplicity Intelli-Comfort Controller, Technicoat Cond. Coil, & Coil Guard
LH	Simplicity Intelli-Comfort Controller, Technicoat Cond. Coil, Phase Monitor, & Coil Guard
LJ	Simplicity Intelli-Comfort Controller, & Technicoat Evap. Coil
LK	Simplicity Intelli-Comfort Controller, Technicoat Evap. Coil, & Phase Monitor
LL	Simplicity Intelli-Comfort Controller, Technicoat Evap. Coil, & Coil Guard
LM	Simplicity Intelli-Comfort Controller, Technicoat Evap. Coil, Phase Monitor, & Coil Guard
LN	Simplicity Intelli-Comfort Controller, & Technicoat Evap. & Cond Coils
LP	Simplicity Intelli-Comfort Controller, Technicoat Evap. & Cond Coils, & Phase Monitor
LQ	Simplicity Intelli-Comfort Controller, Technicoat Evap. & Cond Coils, & Coil Guard
LR	Simplicity Intelli-Comfort Controller, Technicoat Evap. & Cond Coils, Phase Monitor, & Coil Guard
LS	Simplicity Intelli-Comfort Controller, SS Drain Pan
LT	Simplicity Intelli-Comfort Controller, SS Drain Pan, Phase Monitor, & Coil Guard
LU	Simplicity Intelli-Comfort Controller, SS Drain Pan, & Technicoat Cond Coils
LV	Simplicity Intelli-Comfort Controller, SS Drain Pan, & Technicoat Evap Coil
LW	Simplicity Intelli-Comfort Controller, SS Drain Pan, & Technicoat Evap and Cond Coils
LX	Simplicity Intelli-Comfort Controller, SS Drain Pan, Phase Monitor, Coil Guard, & Technicoat Evap and Cond Coils
WA	Intelli-Comfort w/ModLINC Controller
WB	Intelli-Comfort w/ModLINC Controller, & Phase Monitor
WC	Intelli-Comfort w/ModLINC Controller, & Coil Guard
WD	Intelli-Comfort w/ModLINC Controller, Phase Monitor, & Coil Guard
WE	Intelli-Comfort w/ModLINC Controller, & Technicoat Cond. Coil

Standard Cabinet	
WF	Intelli-Comfort w/ModLINC Controller, Technicoat Cond. Coil, & Phase Monitor
WG	Intelli-Comfort w/ModLINC Controller, Technicoat Cond. Coil, & Coil Guard
WH	Intelli-Comfort w/ModLINC Controller, Technicoat Cond. Coil, Phase Monitor, & Coil Guard
WJ	Intelli-Comfort w/ModLINC Controller, & Technicoat Evap. Coil
WK	Intelli-Comfort w/ModLINC Controller, Technicoat Evap. Coil, & Phase Monitor
WL	Intelli-Comfort w/ModLINC Controller, Technicoat Evap. Coil, & Coil Guard
WM	Intelli-Comfort w/ModLINC Controller, Technicoat Evap. Coil, Phase Monitor, & Coil Guard
WN	Intelli-Comfort w/ModLINC Controller, & Technicoat Evap. & Cond Coils
WP	Intelli-Comfort w/ModLINC Controller, Technicoat Evap. & Cond Coils, & Phase Monitor
WQ	Intelli-Comfort w/ModLINC Controller, Technicoat Evap. & Cond Coils, & Coil Guard
WR	Intelli-Comfort w/ModLINC Controller, Technicoat Evap. & Cond Coils, Phase Monitor, & Coil Guard
WS	Intelli-Comfort w/ModLINC Controller, SS Drain Pan
WT	Intelli-Comfort w/ModLINC Controller, SS Drain Pan, Phase Monitor, & Coil Guard
WU	Intelli-Comfort w/ModLINC Controller, SS Drain Pan, & Technicoat Cond Coils
WV	Intelli-Comfort w/ModLINC Controller, SS Drain Pan, & Technicoat Evap Coil
WW	Intelli-Comfort w/ModLINC Controller, SS Drain Pan, & Technicoat Evap and Cond Coils
WX	Intelli-Comfort w/ModLINC Controller, SS Drain Pan, Phase Monitor, Coil Guard, & Technicoat Evap and Cond Coils

Hinged Filter Door & Toolless Access Cabinet	
BA	Hinged Filter Door & Toolless Access Panels
BB	Phase Monitor, Hinged Filter Door & Toolless Access Panels
BC	Coil Guard, Hinged Filter Door & Toolless Access Panels
BD	Dirty Filter Switch, Hinged Filter Door & Toolless Access Panels
BE	Phase Monitor & Coil Guard, Hinged Filter Door & Toolless Access Panels
BF	Phase Monitor & Dirty Filter Switch, Hinged Filter Door & Toolless Access Panels
BG	Coil Guard & Dirty Filter Switch, Hinged Filter Door & Toolless Access Panels
BH	Phase Monitor, Coil Guard, & Dirty Filter Switch, Hinged Filter Door & Toolless Access Panels
BJ	SS Drain Pan & Hinged Filter Door & Toolless Access Panels
BK	SS Drain Pan & Phase Monitor, Hinged Filter Door & Toolless Access Panels
BL	SS Drain Pan & Coil Guard, Hinged Filter Door & Toolless Access Panels
BM	SS Drain Pan & Dirty Filter Switch, Hinged Filter Door & Toolless Access Panels
BN	SS Drain Pan & Phase Monitor & Coil Guard, Dirty Filter Switch, Hinged Filter Door & Toolless Access Panels
BS	Bottom Drain Connection, Hinged Filter Door & Toolless Access Panels
DA	CPC Controller with Dirty Filter Switch & Air Proving Switch, Hinged Filter Door & Toolless Access Panels
DB	CPC Controller, DFS, APS & Phase Monitor, Hinged Filter Door & Toolless Access Panels
DC	CPC Controller, DFS, APS & Coil Guard, Hinged Filter Door & Toolless Access Panels
DD	CPC Controller, DFS, APS, Phase Monitor, & Coil Guard, Hinged Filter Door & Toolless Access Panels
DE	CPC Controller, DFS, APS & Technicoat Cond. Coil, Hinged Filter Door & Toolless Access Panels
DF	CPC Controller, DFS, APS, Technicoat Cond. Coil, & Phase Monitor, Hinged Filter Door & Toolless Access Panels
DG	CPC Controller, DFS, APS, Technicoat Cond. Coil, & Coil Guard, Hinged Filter Door & Toolless Access Panels
DH	CPC Controller, DFS, APS, Technicoat Cond. Coil, Phase Monitor, & Coil Guard, Hinged Filter Door & Toolless Access Panels
DJ	CPC Controller, DFS, APS & Technicoat Evap. Coil, Hinged Filter Door & Toolless Access Panels
DK	CPC Controller, DFS, APS, Technicoat Evap. Coil, & Phase Monitor, Hinged Filter Door & Toolless Access Panels
DL	CPC Controller, DFS, APS, Technicoat Evap. Coil, & Coil Guard, Hinged Filter Door & Toolless Access Panels
DM	CPC Controller, DFS, APS, Technicoat Evap. Coil, Phase Monitor, & Coil Guard, Hinged Filter Door & Toolless Access Panels
DN	CPC Controller, DFS, APS & Technicoat Evap. & Cond Coils, Hinged Filter Door & Toolless Access Panels
DP	CPC Controller, DFS, APS, Technicoat Evap. & Cond Coils, & Phase Monitor, Hinged Filter Door & Toolless Access Panels
DQ	CPC Controller, DFS, APS, Technicoat Evap. & Cond Coils, & Coil Guard, Hinged Filter Door & Toolless Access Panels
DR	CPC Controller, DFS, APS, Technicoat Evap. & Cond Coils, Phase Monitor, & Coil Guard, Hinged Filter Door & Toolless Access Panels
DS	CPC Controller, DFS, APS, SS Drain Pan Hinged Filter Door & Toolless Access Panels
DT	CPC Controller, DFS, APS, SS Drain Pan, Phase Monitor, & Coil Guard Hinged Filter Door & Toolless Access Panels
DU	CPC Controller, DFS, APS, SS Drain Pan, & Technicoat Cond Coils Hinged Filter Door & Toolless Access Panels
DV	CPC Controller, DFS, APS, SS Drain Pan, & Technicoat Evap Coil Hinged Filter Door & Toolless Access Panels
DW	CPC Controller, DFS, APS, SS Drain Pan, & Technicoat Evap and Cond Coils Hinged Filter Door & Toolless Access Panels

Hinged Filter Door & Toolless Access Cabinet	
DX	CPC Controller, DFS, APS, SS Drain Pan, Phase Monitor, Coil Guard, & Technicoat Evap and Cond Coils Hinged Filter Door & Toolless Access Panels
EA	Johnson UNT Controller with Dirty Filter Switch & Air Proving Switch, Hinged Filter Door & Toolless Access Panels
EB	Johnson UNT Controller, DFS, APS & Phase Monitor, Hinged Filter Door & Toolless Access Panels
EC	Johnson UNT Controller, DFS, APS & Coil Guard, Hinged Filter Door & Toolless Access Panels
ED	Johnson UNT Controller, DFS, APS, Phase Monitor, & Coil Guard, Hinged Filter Door & Toolless Access Panels
EE	Johnson UNT Controller, DFS, APS & Technicoat Cond. Coil, Hinged Filter Door & Toolless Access Panels
EF	Johnson UNT Controller, DFS, APS, Technicoat Cond. Coil, & Phase Monitor, Hinged Filter Door & Toolless Access Panels
EG	Johnson UNT Controller, DFS, APS, Technicoat Cond. Coil, & Coil Guard, Hinged Filter Door & Toolless Access Panels
EH	Johnson UNT Controller, DFS, APS, Technicoat Cond. Coil, Phase Monitor, & Coil Guard, Hinged Filter Door & Toolless Access Panels
EJ	Johnson UNT Controller, DFS, APS & Technicoat Evap. Coil, Hinged Filter Door & Toolless Access Panels
EK	Johnson UNT Controller, DFS, APS, Technicoat Evap. Coil, & Phase Monitor, Hinged Filter Door & Toolless Access Panels
EL	Johnson UNT Controller, DFS, APS, Technicoat Evap. Coil, & Coil Guard, Hinged Filter Door & Toolless Access Panels
EM	Johnson UNT Controller, DFS, APS, Technicoat Evap. Coil, Phase Monitor, & Coil Guard, Hinged Filter Door & Toolless Access Panels
EN	Johnson UNT Controller, DFS, APS & Technicoat Evap. & Cond Coils, Hinged Filter Door & Toolless Access Panels
EP	Johnson UNT Controller, DFS, APS, Technicoat Evap. & Cond Coils, & Phase Monitor, Hinged Filter Door & Toolless Access Panels
EQ	Johnson UNT Controller, DFS, APS, Technicoat Evap. & Cond Coils, & Coil Guard, Hinged Filter Door & Toolless Access Panels
ER	Johnson UNT Controller, DFS, APS, Technicoat Evap. & Cond Coils, Phase Monitor, & Coil Guard, Hinged Filter Door & Toolless Access Panels
ES	Johnson UNT Controller, DFS, APS, SS Drain Pan Hinged Filter Door & Toolless Access Panels
ET	Johnson UNT Controller, DFS, APS, SS Drain Pan, Phase Monitor, & Coil Guard Hinged Filter Door & Toolless Access Panels
EU	Johnson UNT Controller, DFS, APS, SS Drain Pan, & Technicoat Cond Coils Hinged Filter Door & Toolless Access Panels
EV	Johnson UNT Controller, DFS, APS, SS Drain Pan, & Technicoat Evap Coil Hinged Filter Door & Toolless Access Panels
EW	Johnson UNT Controller, DFS, APS, SS Drain Pan, & Technicoat Evap and Cond Coils Hinged Filter Door & Toolless Access Panels
EX	Johnson UNT Controller, DFS, APS, SS Drain Pan, Phase Monitor, Coil Guard, & Technicoat Evap and Cond Coils Hinged Filter Door & Toolless Access Panels
GA	Honeywell Excel 10 Controller with Dirty Filter Switch & Air Proving Switch, Hinged Filter Door & Toolless Access Panels
GB	Honeywell Excel 10 Controller, DFS, APS & Phase Monitor, Hinged Filter Door & Toolless Access Panels
GC	Honeywell Excel 10 Controller, DFS, APS & Coil Guard, Hinged Filter Door & Toolless Access Panels
GD	Honeywell Excel 10 Controller, DFS, APS, Phase Monitor, & Coil Guard, Hinged Filter Door & Toolless Access Panels
GE	Honeywell Excel 10 Controller, DFS, APS & Technicoat Cond. Coil, Hinged Filter Door & Toolless Access Panels
GF	Honeywell Excel 10 Controller, DFS, APS, Technicoat Cond. Coil, & Phase Monitor, Hinged Filter Door & Toolless Access Panels
GG	Honeywell Excel 10 Controller, DFS, APS, Technicoat Cond. Coil, & Coil Guard, Hinged Filter Door & Toolless Access Panels
GH	Honeywell Excel 10 Controller, DFS, APS, Technicoat Cond. Coil, Phase Monitor, & Coil Guard, Hinged Filter Door & Toolless Access Panels
GJ	Honeywell Excel 10 Controller, DFS, APS & Technicoat Evap. Coil, Hinged Filter Door & Toolless Access Panels
GK	Honeywell Excel 10 Controller, DFS, APS, Technicoat Evap. Coil, & Phase Monitor, Hinged Filter Door & Toolless Access Panels
GL	Honeywell Excel 10 Controller, DFS, APS, Technicoat Evap. Coil, & Coil Guard, Hinged Filter Door & Toolless Access Panels
GM	Honeywell Excel 10 Controller, DFS, APS, Technicoat Evap. Coil, Phase Monitor, & Coil Guard, Hinged Filter Door & Toolless Access Panels
GN	Honeywell Excel 10 Controller, DFS, APS & Technicoat Evap. & Cond Coils, Hinged Filter Door & Toolless Access Panels
GP	Honeywell Excel 10 Controller, DFS, APS, Technicoat Evap. & Cond Coils, & Phase Monitor, Hinged Filter Door & Toolless Access Panels
GQ	Honeywell Excel 10 Controller, DFS, APS, Technicoat Evap. & Cond Coils, & Coil Guard, Hinged Filter Door & Toolless Access Panels
GR	Honeywell Excel 10 Controller, DFS, APS, Technicoat Evap. & Cond Coils, Phase Monitor, & Coil Guard, Hinged Filter Door & Toolless Access Panels
GS	Honeywell Excel 10 Controller, DFS, APS, SS Drain Pan
GT	Honeywell Excel 10 Controller, DFS, APS, SS Drain Pan, Phase Monitor, & Coil Guard
GU	Honeywell Excel 10 Controller, DFS, APS, SS Drain Pan, & Technicoat Cond Coils
GV	Honeywell Excel 10 Controller,DFS, APS, SS Drain Pan, & Technicoat Evap Coil
GW	Honeywell Excel 10 Controller,DFS, APS, SS Drain Pan, & Technicoat Evap and Cond Coils
GX	Honeywell Excel 10 Controller,DFS, APS, SS Drain Pan, Phase Monitor, Coil Guard, & Technicoat Evap and Cond Coils
PA	Novar ETC-3 Controller with Dirty Filter Switch & Air Proving Switch, Hinged Filter Door & Toolless Access Panels
PB	Novar ETC-3 Controller, DFS, APS & Phase Monitor, Hinged Filter Door & Toolless Access Panels

Hinged Filter Door & Toolless Access Cabinet	
PC	Novar ETC-3 Controller, DFS, APS & Coil Guard, Hinged Filter Door & Toolless Access Panels
PD	Novar ETC-3 Controller, DFS, APS, Phase Monitor, & Coil Guard, Hinged Filter Door & Toolless Access Panels
PE	Novar ETC-3 Controller, DFS, APS & Technicoat Cond. Coil, Hinged Filter Door & Toolless Access Panels
PF	Novar ETC-3 Controller, DFS, APS, Technicoat Cond. Coil, & Phase Monitor, Hinged Filter Door & Toolless Access Panels
PG	Novar ETC-3 Controller, DFS, APS, Technicoat Cond. Coil, & Coil Guard, Hinged Filter Door & Toolless Access Panels
PH	Novar ETC-3 Controller, DFS, APS, Technicoat Cond. Coil, Phase Monitor, & Coil Guard, Hinged Filter Door & Toolless Access Panels
PJ	Novar ETC-3 Controller, DFS, APS & Technicoat Evap. Coil, Hinged Filter Door & Toolless Access Panels
PK	Novar ETC-3 Controller, DFS, APS, Technicoat Evap. Coil, & Phase Monitor, Hinged Filter Door & Toolless Access Panels
PL	Novar ETC-3 Controller, DFS, APS, Technicoat Evap. Coil, & Coil Guard, Hinged Filter Door & Toolless Access Panels
PM	Novar ETC-3 Controller, DFS, APS, Technicoat Evap. Coil, Phase Monitor, & Coil Guard, Hinged Filter Door & Toolless Access Panels
PN	Novar ETC-3 Controller, DFS, APS & Technicoat Evap. & Cond Coils, Hinged Filter Door & Toolless Access Panels
PP	Novar ETC-3 Controller, DFS, APS, Technicoat Evap. & Cond Coils, & Phase Monitor, Hinged Filter Door & Toolless Access Panels
PQ	Novar ETC-3 Controller, DFS, APS, Technicoat Evap. & Cond Coils, & Coil Guard, Hinged Filter Door & Toolless Access Panels
PR	Novar ETC-3 Controller, DFS, APS, Technicoat Evap. & Cond Coils, Phase Monitor, & Coil Guard, Hinged Filter Door & Toolless Access Panels
PS	Novar ETC-3 Controller, DFS, APS, SS Drain Pan
PT	Novar ETC-3 Controller, DFS, APS, SS Drain Pan, Phase Monitor, & Coil Guard
PU	Novar ETC-3 Controller, DFS, APS, SS Drain Pan, & Technicoat Cond Coils
PV	Novar ETC-3 Controller, DFS, APS, SS Drain Pan, & Technicoat Evap Coil
PW	Novar ETC-3, DFS, APS, SS Drain Pan, & Technicoat Evap and Cond Coils
PX	Novar ETC-3 Controller, DFS, APS, SS Drain Pan, Phase Monitor, Coil Guard, & Technicoat Evap and Cond Coils
UA	Technicoat Condenser Coil, Hinged Filter Door & Toolless Access Panels
UB	Technicoat Condenser Coil & Phase Monitor, Hinged Filter Door & Toolless Access Panels
UC	Technicoat Condenser Coil & Coil Guard, Hinged Filter Door & Toolless Access Panels
UD	Technicoat Condenser Coil & Dirty Filter Switch, Hinged Filter Door & Toolless Access Panels
UE	Technicoat Condenser Coil, Phase Monitor, & Coil Guard, Hinged Filter Door & Toolless Access Panels
UF	Technicoat Condenser Coil, Phase Monitor, & Dirty Filter Switch, Hinged Filter Door & Toolless Access Panels
UG	Technicoat Condenser Coil, Coil Guard, & Dirty Filter Switch, Hinged Filter Door & Toolless Access Panels
UH	Technicoat Condenser Coil, Phase Monitor, Coil Guard, & Dirty Filter Switch, Hinged Filter Door & Toolless Access Panels
UJ	Technicoat Evaporator Coil, Hinged Filter Door & Toolless Access Panels
UK	Technicoat Evaporator Coil & Phase Monitor, Hinged Filter Door & Toolless Access Panels
UL	Technicoat Evaporator Coil & Coil Guard, Hinged Filter Door & Toolless Access Panels
UM	Technicoat Evaporator Coil & Dirty Filter Switch, Hinged Filter Door & Toolless Access Panels
UN	Technicoat Evaporator Coil, Phase Monitor, & Coil Guard, Hinged Filter Door & Toolless Access Panels
UP	Technicoat Evaporator Coil, Phase Monitor, & Dirty Filter Switch, Hinged Filter Door & Toolless Access Panels
UQ	Technicoat Evaporator Coil, Coil Guard, & Dirty Filter Switch, Hinged Filter Door & Toolless Access Panels
UR	Technicoat Evaporator Coil, Phase Monitor, Coil Guard, & Dirty Filter Switch, Hinged Filter Door & Toolless Access Panels
US	Technicoat Evaporator & Condenser Coils, Hinged Filter Door & Toolless Access Panels
UT	Technicoat Evaporator & Condenser Coils & Phase Monitor, Hinged Filter Door & Toolless Access Panels
UU	Technicoat Evaporator & Condenser Coils & Coil Guard, Hinged Filter Door & Toolless Access Panels
UV	Technicoat Evaporator & Condenser Coils & Dirty Filter Switch, Hinged Filter Door & Toolless Access Panels
UW	Technicoat Evaporator & Condenser Coils, Phase Monitor, & Coil Guard, Hinged Filter Door & Toolless Access Panels
UX	Technicoat Evaporator & Condenser Coils, Phase Monitor, & Dirty Filter Switch, Hinged Filter Door & Toolless Access Panels
UY	Technicoat Evaporator & Condenser Coils, Coil Guard, & Dirty Filter Switch, Hinged Filter Door & Toolless Access Panels
UZ	Technicoat Evaporator & Condenser Coils, Phase Monitor, Coil Guard, & Dirty Filter Switch, Hinged Filter Door & Toolless Access Panels
U1	Technicoat Condenser & SS Drain Pan, Hinged Filter Door & Toolless Access Panels
U3	Technicoat Condenser Coil, SS Drain Pan, Phase Monitor, Coil Guard, & Dirty Filter Switch, Hinged Filter Door & Toolless Access Panels
U4	Technicoat Evaporator & SS Drain Pan, Hinged Filter Door & Toolless Access Panels
U6	Technicoat Evaporator Coil, SS Drain Pan, Phase Monitor, Coil Guard, & Dirty Filter Switch, Hinged Filter Door & Toolless Access Panels
U7	Technicoat Evaporator & Condenser Coils & SS Drain Pan, Hinged Filter Door & Toolless Access Panels
U9	Technicoat Evaporator & Condenser Coils, SS Drain Pan, Phase Monitor, Coil Guard, & Dirty Filter Switch, Hinged Filter Door & Toolless Access Panels
QA	Simplicity Intelli-Comfort Controller with Hinged Filter Door & Toolless Access Panels
QB	Simplicity Intelli-Comfort Controller, & Phase Monitor, Hinged Filter Door & Toolless Access Panels
QC	Simplicity Intelli-Comfort Controller, & Coil Guard, Hinged Filter Door & Toolless Access Panels

Hinged Filter Door & Toolless Access Cabinet	
QD	Simplicity Intelli-Comfort Controller, Phase Monitor, & Coil Guard, Hinged Filter Door & Toolless Access Panels
QE	Simplicity Intelli-Comfort Controller, & Technicoat Cond. Coil, Hinged Filter Door & Toolless Access Panels
QF	Simplicity Intelli-Comfort Controller, Technicoat Cond. Coil, & Phase Monitor, Hinged Filter Door & Toolless Access Panels
QG	Simplicity Intelli-Comfort Controller, Technicoat Cond. Coil, & Coil Guard, Hinged Filter Door & Toolless Access Panels
QH	Simplicity Intelli-Comfort Controller, Technicoat Cond. Coil, Phase Monitor, & Coil Guard, Hinged Filter Door & Toolless Access
QJ	Simplicity Intelli-Comfort Controller, & Technicoat Evap. Coil, Hinged Filter Door & Toolless Access Panels
QK	Simplicity Intelli-Comfort Controller, Technicoat Evap. Coil, & Phase Monitor, Hinged Filter Door & Toolless Access Panels
QL	Simplicity Intelli-Comfort Controller, Technicoat Evap. Coil, & Coil Guard, Hinged Filter Door & Toolless Access Panels
QM	Simplicity Intelli-Comfort Controller, Technicoat Evap. Coil, Phase Monitor, & Coil Guard, Hinged Filter Door & Toolless Access
QN	Simplicity Intelli-Comfort Controller, & Technicoat Evap. & Cond Coils, Hinged Filter Door & Toolless Access Panels
QP	Simplicity Intelli-Comfort Controller, Technicoat Evap. & Cond Coils, & Phase Monitor, Hinged Filter Door & Toolless Access Pan
QQ	Simplicity Intelli-Comfort Controller, Technicoat Evap. & Cond Coils, & Coil Guard, Hinged Filter Door & Toolless Access Panels
QR	Simplicity Intelli-Comfort Controller, Technicoat Evap. & Cond Coils, Phase Monitor, & Coil Guard, Hinged Filter Door & Toolles
QS	Simplicity Intelli-Comfort Controller, SS Drain Pan Hinged Filter Door & Toolless Access Panels
QT	Simplicity Intelli-Comfort Controller, SS Drain Pan, Phase Monitor, & Coil Guard Hinged Filter Door & Toolless Access Panels
QU	Simplicity Intelli-Comfort Controller, SS Drain Pan, & Technicoat Cond Coils Hinged Filter Door & Toolless Access Panels
QV	Simplicity Intelli-Comfort Controller, SS Drain Pan, & Technicoat Evap Coil Hinged Filter Door & Toolless Access Panels
QW	Simplicity Intelli-Comfort Controller, SS Drain Pan, & Technicoat Evap and Cond Coils Hinged Filter Door & Toolless Access Panels
QX	Simplicity Intelli-Comfort Controller, SS Drain Pan, Phase Monitor, Coil Guard, & Technicoat Evap and Cond Coils Hinged Filter Door & Toolless Access Panels
XA	Intelli-Comfort w/ModLINC Controller, Hinged Filter Door & Toolless Access Panels
XB	Intelli-Comfort w/ModLINC Controller, & Phase Monitor, Hinged Filter Door & Toolless Access Panels
XC	Intelli-Comfort w/ModLINC Controller, & Coil Guard, Hinged Filter Door & Toolless Access Panels
XD	Intelli-Comfort w/ModLINC Controller, Phase Monitor, & Coil Guard, Hinged Filter Door & Toolless Access Panels
XE	Intelli-Comfort w/ModLINC Controller, & Technicoat Cond. Coil, Hinged Filter Door & Toolless Access Panels
XF	Intelli-Comfort w/ModLINC Controller, Technicoat Cond. Coil, & Phase Monitor, Hinged Filter Door & Toolless Access Panels
XG	Intelli-Comfort w/ModLINC Controller, Technicoat Cond. Coil, & Coil Guard, Hinged Filter Door & Toolless Access Panels
XH	Intelli-Comfort w/ModLINC Controller, Technicoat Cond. Coil, Phase Monitor, & Coil Guard, Hinged Filter Door & Toolless Access
XJ	Intelli-Comfort w/ModLINC Controller, & Technicoat Evap. Coil, Hinged Filter Door & Toolless Access Panels
XK	Intelli-Comfort w/ModLINC Controller, Technicoat Evap. Coil, & Phase Monitor, Hinged Filter Door & Toolless Access Panels
XL	Intelli-Comfort w/ModLINC Controller, Technicoat Evap. Coil, & Coil Guard, Hinged Filter Door & Toolless Access Panels
XM	Intelli-Comfort w/ModLINC Controller, Technicoat Evap. Coil, Phase Monitor, & Coil Guard, Hinged Filter Door & Toolless Access
XN	Intelli-Comfort w/ModLINC Controller, & Technicoat Evap. & Cond Coils, Hinged Filter Door & Toolless Access Panels
XP	Intelli-Comfort w/ModLINC Controller, Technicoat Evap. & Cond Coils, & Phase Monitor, Hinged Filter Door & Toolless Access Pan
XQ	Intelli-Comfort w/ModLINC Controller, Technicoat Evap. & Cond Coils, & Coil Guard, Hinged Filter Door & Toolless Access Panels
XR	Intelli-Comfort w/ModLINC Controller, Technicoat Evap. & Cond Coils, Phase Monitor, & Coil Guard, Hinged Filter Door & Toolles
XS	Intelli-Comfort w/ModLINC Controller, SS Drain Pan Hinged Filter Door & Toolless Access Panels
XT	Intelli-Comfort w/ModLINC Controller, SS Drain Pan, Phase Monitor, & Coil Guard Hinged Filter Door & Toolless Access Panels
XU	Intelli-Comfort w/ModLINC Controller, SS Drain Pan, & Technicoat Cond Coils Hinged Filter Door & Toolless Access Panels
XV	Intelli-Comfort w/ModLINC Controller, SS Drain Pan, & Technicoat Evap Coil Hinged Filter Door & Toolless Access Panels
XW	Intelli-Comfort w/ModLINC Controller, SS Drain Pan, & Technicoat Evap and Cond Coils Hinged Filter Door & Toolless Access Panels
XX	Intelli-Comfort w/ModLINC Controller, SS Drain Pan, Phase Monitor, Coil Guard, & Technicoat Evap and Cond Coils Hinged Filter Door & Toolless Access Panels

FEATURES

All models are available with a wide variety of factory-mounted options such as electric heaters, phase monitor, convenience outlet, dirty filter switch, disconnect switch, smoke detectors, and coil guards to make them suitable for almost every application.

All units are self-contained and assembled on full perimeter base rails with forklift holes on three sides and holes for overhead rigging. Every unit is completely piped, wired, charged and tested at the factory to simplify the field installation and to provide years of dependable operation.

All models (including those with an economizer) are suitable for either bottom or horizontal duct connections. For bottom duct, remove the sheet metal panels from the supply and return air openings through the base of the unit. For horizontal duct, remove the supply and return air panels on the rear of the unit.

All models are available with these “factory mounted” outdoor air damper options:

- Single enthalpy economizer
- Motorized outdoor air damper

Supply air blowers are equipped with a belt drive that can be adjusted to meet the exact requirements of the job.

All compressors are equipped with internal pressure relief. Every refrigerant circuit includes a liquid line filter-drier, a high pressure switch and a suction line with a freezestat and low pressure/loss of charge switch to protect all system components.

- **Simplicity® Controls - Simplicity®** control boards have standardized a number of features previously available only as options or by utilizing additional controls.
    - **Low Ambient** - An integrated low-ambient control allows all units to operate in the cooling mode down to 0ºF outdoor ambient without additional assistance. Optionally, the control board can be programmed to lockout the compressors when the outdoor air temperature is low or when free cooling is available.
    - **Anti-Short Cycle Protection** - To aid compressor life, an anti-short cycle delay is incorporated into the standard controls. Compressor reliability is further ensured by programmable minimum run times. For testing, the anti short cycle delay can be temporarily overridden with the push of a button.
    - **Fan Delays** - Fan on and fan off delays are fully programmable and are independent of one another. All units are programmed with default values based upon their configuration of cooling and heat.
    - **Safety Monitoring** - The control board monitors the high and low-pressure switches, the freezestats, the gas valve, if applicable, and the temperature limit switch on gas heat units. The unit control board will alarm on ignition failures, compressor lockouts and repeated limit switch trips.
    - **Nuisance Trip Protection**- To prevent nuisance trouble calls, the control board uses a “three strikes, you’re out” philosophy. The high and low-pressure switches and the freezestats must trip three times within two hours before the unit control board will lock out the compressor.
    - **On Board Diagnostics** - Each alarm will energize a trouble light on the thermostat, if so equipped, and flash an alarm code on the control board LED. Each high and low-pressure switch alarm as well as each freezestat alarm has its own flash code. The control board saves the five most recent alarms in memory, and these alarms can be reviewed at any time. Alarms and programmed values are retained through the loss of power.

All units have long lasting powder paint cabinets with 750 hour salt spray test approval under ASTM-B117 procedures.

All models are CSA listed.

- **Warranty** - All models include a one-year limited parts warranty on the complete unit. Compressors and electric heater elements carry a five-year warranty
- **Electric Heat Operation** - All electric heat models are wired for a single power source and include a bank of nickel chromium elements mounted at the discharge of the supply air blower to provide a high velocity and uniform distribution of air across the heating elements. Every element is fully protected against excessive temperature by thermal limit switches.

  The power supply wiring can be routed into the control box through a threaded pipe connection (field supplied) in the base pan of the unit or through a knockout in the wiring panel on the side of the unit.
- **BAS Controls** - York’s Sunline™ series units offer factory mounted BAS controls such as Simplicity® INTELLI-Comfort™, Novar, Honeywell, Johnson, and CPC.

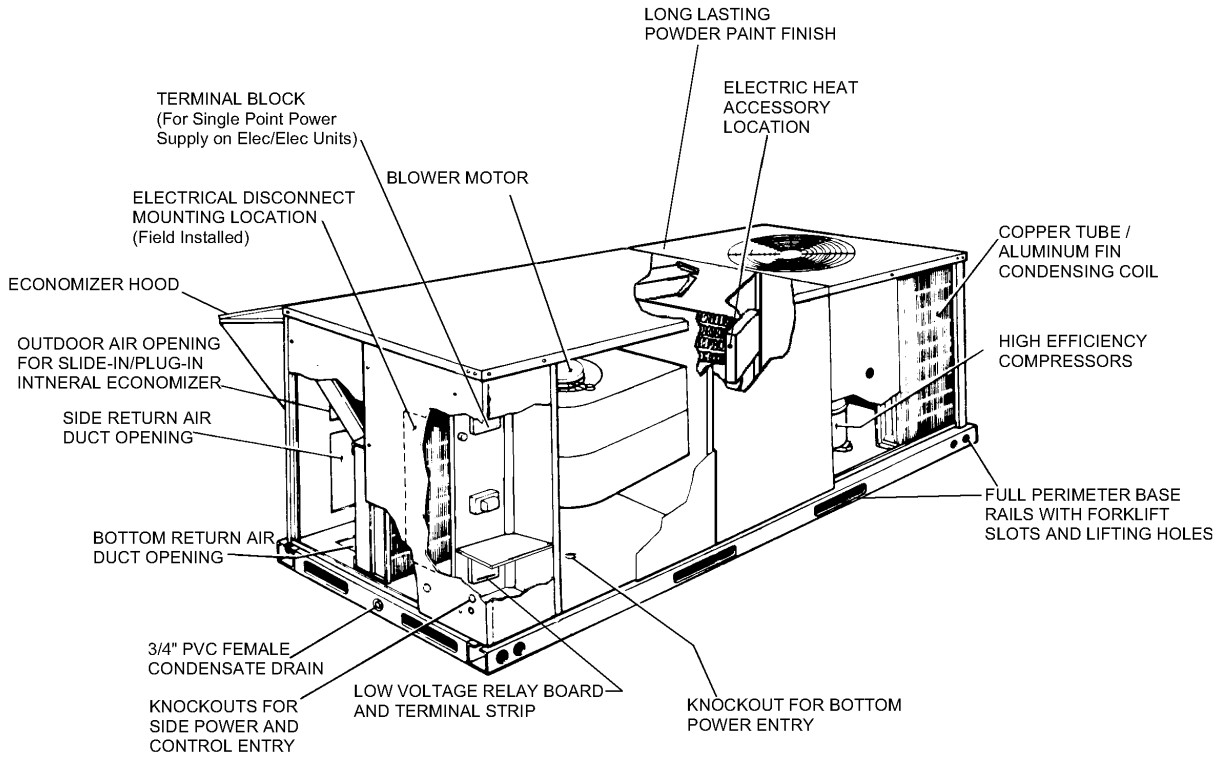

FIGURE 1 - UNIT CUTAWAY

FACTORY-INSTALLED OPTIONS

- **SINGLE INPUT ELECTRONIC ENTHALPY ECONOMIZERS** - Includes a slide-in / plug-in damper assembly with fully modulating spring-return motor actuator capable of introducing up to 100% outdoor air with nominal 1% leakage type dampers.

  The enthalpy system contains one sensor that monitors the outdoor air and determines when the air is cool enough and dry enough to provide free cooling.

  The rainhood is painted to match the basic unit and must be field-assembled before installing.

- **MOTORIZED OUTDOOR AIR INTAKE DAMPER** - Includes a slide-in / plug-in damper assembly with a 2-position, spring return motor actuator which opens to a pre-set position whenever the supply air blower is operating and will drive fully closed when the blower unit shuts down.

  The rain hood is painted to match the basic unit and must be field assembled before installing.

- **PHENOLIC COATED EVAPORATOR AND CONDENSER COILS** - Special coating process that utilizes Technicoat 10-1™ processes. Coating is applied by total immersion of the complete coil for maximum protection.

- **ELECTRIC HEATERS** - Wired for single point power supply. These nickel chromium heater elements are provided with limit and automatic reset capability to prevent operation at excessive temperatures.

- **FILTER OPTIONS** - Standard units are shipped with 1” throw-away filters installed. 2” pleated filters are offered as a factory installed option.

- **CONVENIENCE OUTLET -** This 110 volt outlet can be “powered” by the unit with a stepdown transformer or the unit may be ordered with a “non-powered” convenience outlet that can be wired in the field.

- **DISCONNECT SWITCH** - For heat pump units with electric heat, an HACR breaker sized to the unit is provided. For heat pump units without electric heat, a switch sized to the largest electric heat available for the particular unit is provided. Factory-installed option only.

- **BAS - Building Automation System Controls Simplicity® INTELLI-Comfort™ CONTROL -** The York® Simplicity® INTELLI-Comfort™ control is factory installed. It includes a supply air sensor, a return air sensor, and an outside air sensor. There are provisions for a field installed dirty filter indicator switch, an air-proving switch, an Outside Air Humidity sensor, a Return Air Humidity sensor, an Inside IAQ sensor, and an Outside

Air IAQ sensor. Construction mode operation, 365-day real time clock with 7 day programming plus holiday scheduling is built-in. Two different modes of demand ventilation are achieved through the INTELLI-Comfort™using CO_2 sensors. It uses an inside CO_2 sensor to perform Demand Ventilation. It can also use an Outside CO_2 sensor to perform Differential Demand Ventilation. It uses a Patented Comfort Ventilation algorithm to provide comfortable ventilation air temperature. The patented economizer-loading algorithm will protect the equipment when harsh operating conditions exist. Humidity in the occupied space or return duct can be monitored and controlled via humidity sensors and the on-board connection for hot gas re-heat system. It uses the INTELLI-Start™ algorithm to maximize energy savings by recovering the building from the Unoccupied Setpoints to the Occupied Setpoints just in time for the Occupied Time Period to begin. The Simplicity® INTELLI-Comfort™ balances space temperature, ventilation air temperature, CO_2 and humidity for ultimate comfort.

- **Simplicity® INTELLI-Comfort™ with ModLINC CONTROL -** The York® Simplicity® INTELLI-Comfort™ with ModLINC control is factory installed. It includes all the features of the INTELLI-Comfort™ control with an additional control to translate communications from MODBUS to the BACnet MSTP protocol.
- **Novar® BAS CONTROL -** The Novar® ETC-3 building automation system controller is factory installed. Includes supply air sensor, return air sensor, dirty filter indicator switch, and air proving switch.
- **JOHNSON CONTROLS BAS CONTROL -** The Johnson Control YK-UNT-1126 building automation system controller is factory installed. Includes supply air sensor, return air sensor, dirty filter indicator switch, and air proving switch.
- **CPC BAS CONTROL -** The Computer Process Controls Model 810-3060 ARTC Advanced Rooftop building automation system controller is factory installed. Includes supply air sensor, return air sensor, dirty filter indicator switch and air proving switch.
- **HONEYWELL BAS CONTROL -** The Honeywell W7750C building automation system controller is factory installed. Includes air supply sensor, return air sensor, dirty filter indicator switch, and air proving switch.
- **SMOKE DETECTORS** - (supply air & return air) The smoke detectors stop operation of the unit by interrupting power to the control board if smoke is detected within the air compartment.
- **STAINLESS STEEL DRAIN PAN -** An optional rust-proof stainless steel drain pan is available to provide years of trouble-free operation in corrosive environments.
- **BOTTOM DRAIN CONNECTION -** An optional bottom drain connection is available for inside the curb connections for applications in cold environments to reduce freezing drain lines.
- **COIL GUARD** - Customers can purchase a coil guard kit to protect the condenser coil from damage. This is not a hail guard kit.
- **PHASE MONITORS** - Designed to prevent unit damage. The phase monitor will shut the unit down in an out-of-phase condition.
- **DIRTY FILTER SWITCH** - This kit includes a differential pressure switch that energizes the fault light on the unit thermostat, indicating that there is an abnormally high pressure drop across the filters. Factory installed option or field installed accessory.
- **HINGED FILTER DOOR/"TOOLLESS" BLOWER AND ACCESS PANELS** (not hinged) - This option allows for easy access and maintenance.

NOTE: Knobs are shipped inside the unit to prevent shipping damage. These must be field installed for toolless operation.

FIELD-INSTALLED ACCESSORIES

- **SINGLE INPUT ELECTRONIC ENTHALPY ECONOMIZERS** - Includes a slide-in / plug-in damper assembly with fully modulating spring-return motor actuator capable of introducing up to 100% outdoor air with nominal 1% leakage type dampers.

  The enthalpy system contains one sensor that monitors the outdoor air and determines when the air is cool enough and dry enough to provide free cooling.

  The rainhood is painted to match the basic unit and must be field-assembled before installing.
- **MOTORIZED OUTDOOR AIR INTAKE DAMPER** - Includes a slide-in / plug-in damper assembly with a 2-position, spring return motor actuator which opens to some pre-set position whenever the supply air blower is operating and will drive fully closed when the blower unit shuts down.

  The rain hood is painted to match the basic unit and must be field assembled before installing.
- **ELECTRIC HEATERS** wired for single point power supply. These nickel chromium heater elements are provided with limit and automatic reset capability to prevent operation at excessive temperatures.
- **ROOF CURBS** - Eight and fourteen-inch high roof curbs provide a water-tight seal between the unit and the finished roof. These full perimeter curbs meet the requirements of the National Roofing Contractors Association (NRCA) and are shipped knocked-down for field assembly.

Roof curbs are designed to fit inside the base rails of the unit and include both a wood nailing strip and duct hanger supports.

- **POWER EXHAUST** - Our single input economizer options are available with power exhaust. Whenever the outdoor air intake dampers are opened for free cooling, the exhaust fan will be energized to prevent the conditioned space from being over-pressurized during economizer operation.

  The power exhaust option can only be used on bottom duct configurations.

- **BAROMETRIC RELIEF DAMPER** - This damper accessory can be used to relieve internal building air pressure on units with an economizer without power exhaust. This accessory includes a rain hood, a bird screen and a fully assembled damper. With bottom duct connections, the damper should be mounted over the opening in the return air panel. With horizontal ductwork, the accessory should be mounted on the return air duct.

- **ENTHALPY ACCESSORY CONTROL KIT** - This kit contains the required components to convert a single enthalpy economizer to dual enthalpy.

- **BURGLAR BARS** - Mount in the supply and return openings to prevent entry into the duct work.

- **CO_2 SENSOR** - Senses CO_2 levels and automatically overrides the economizer when levels rise above the present limits.

- **COIL GUARD** - Customers can purchase a coil guard kit to protect the condenser coil from damage. This is not a hail guard kit.

- **HAIL GUARD** - Hail guard is available to protect the unit from hail damage. This is a sloped hood that fits above the coil.

TABLE 1: SOUND POWER RATING[1]

UNIT SIZE	CFM	ESP	BLOWER		SOUND POWER (db 10^{-12} Watts)									
					Octave Band Centerline Frequency (Hz)								SWL dB(A)	dB(A) @ 10Ft.[2]
		IWG	SPEED	KW	63	125	250	500	1,000	2,000	4,000	8,000		
072	2200	.3	-	1.35	87	87	77	70	72	65	60	55	77	44

1. These values have been accessed using a model of sound propagation from a point source into the hemispheric\free field. The dBA values provided are to be used for reference only. Calculation of dBA values cover matters of system design and the fan manufacture has no way of knowing the details of each system. This constitutes and expectation to any specification or guarantee requiring a dBA value or sound data in any other form than sound power level ratings.
2. At a distance of 10 feet from the blower.

TABLE 2: CAPACITY RATINGS

UNIT SIZE (MBH)	ARI RATINGS[1]								
	COOLING PERFORMANCE			SOUND RATING[2] bels	HSPF	HEATING CAPACITY			
						47°F		17°F	
	MBH	SEER	EER			MBH	COP	MBH	COP
072	68	N/A	10.20	8.4	N/A	69.0	3.2	43.0	2.2

NOTES:
1. Certified in accordance with the Unitary Large Equipment certification program, which is based on ARI Standard 340/360.
2. Rated in accordance with ARI Standard 270.

SEER = Seasonal Energy Efficiency Ratio - the total cooling output in BTU's during a normal annual usage period for cooling divided by the total electric power input in watt-hoursduring the same period.
EER = Energy Efficiency Ratio-the cooling capacity in BTU's per hour (BTUH) divided by the power input in watts at any given set of rating conditions, expressed in BTUH per watt (BTUH/watt).
COP = Coefficient of Performance - the total heating capacity provided by the refrigeration system, including circulating fan heat but excluding supplementary resistance (BTU's per hour) divided by the total electric input (watts) x 3.412.
HSPF = Heating Seasonal Performance Factor - the total heating output during a normal annual usage period for heating divided by the total electric power input during the same period. (Based on Region IV minimum design heating requirement).

TABLE 3: BP072 COOLING CAPACITIES (6 TON)

RETURN AIR		OUTDOOR AMBIENT TEMPERATURE																	
		85°F									95°F								
		GROSS CAP.[1] MBH	INPUT[2] POWER kW	GROSS SENSIBLE CAPACITY[1], MBH RETURN AIR DRY BULB TEMP. °F							GROSS CAP.[1] MBH	INPUT[2] POWER kW	GROSS SENSIBLE CAPACITY[1], MBH RETURN AIR DRY BULB TEMP. °F						
CFM	WB TEMP °F			86	83	80	77	74	71	68			86	83	80	77	74	71	68
1800	72	76.1	5.26	45.5	39.7	33.8	28.0	22.2	-	-	72.6	5.80	43.1	38.0	32.9	27.7	22.6	-	-
	67	71.2	5.19	57.8	51.9	46.1	40.3	34.4	28.6	22.8	67.0	5.74	55.0	49.9	44.7	39.6	34.5	29.3	24.2
	62	66.0	5.13	66.0	62.8	57.0	51.2	45.3	39.5	33.7	60.9	5.67	60.9	59.8	54.7	49.5	44.4	39.3	34.1
	57	65.4	5.12	65.4	64.0	58.1	52.3	46.5	40.6	34.8	60.7	5.67	60.7	59.9	54.7	49.6	44.5	39.3	34.2
2100	72	78.9	5.28	49.9	43.4	37.0	30.6	24.2	-	-	75.7	5.83	48.2	42.1	36.0	30.0	23.9	-	-
	67	73.8	5.21	63.3	56.9	50.4	44.0	37.6	31.2	24.8	69.8	5.77	61.2	55.1	49.0	43.0	36.9	30.8	24.8
	62	68.3	5.15	68.3	66.8	62.4	56.0	49.6	43.1	36.7	63.4	5.70	63.4	62.9	59.9	53.9	47.8	41.7	35.7
	57	67.8	5.14	67.8	67.0	63.6	57.2	50.8	44.4	38.0	63.2	5.70	63.2	62.8	60.0	53.9	47.9	41.8	35.7
2400	72	81.6	5.30	54.2	47.2	40.2	33.2	26.2	-	-	78.7	5.86	53.2	46.2	39.2	32.2	25.2	-	-
	67	76.3	5.23	68.8	61.8	54.8	47.8	40.8	33.8	26.8	72.6	5.80	67.3	60.3	53.3	46.3	39.4	32.4	25.4
	62	70.7	5.17	70.7	70.7	67.8	60.8	53.8	46.8	39.8	66.0	5.73	66.0	66.0	65.2	58.2	51.2	44.2	37.2
	57	70.1	5.16	70.1	70.1	69.1	62.1	55.1	48.1	41.1	65.7	5.72	65.7	65.7	65.3	58.3	51.3	44.3	37.3
2700	72	83.3	5.31	58.0	50.1	42.1	34.1	26.2	-	-	79.6	5.87	56.9	48.9	41.0	33.0	25.0	-	-
	67	77.9	5.24	73.3	65.3	57.4	49.4	41.4	33.5	25.5	73.4	5.81	70.8	63.7	55.8	47.8	39.8	31.9	23.9
	62	72.1	5.18	72.1	72.1	70.7	62.7	54.7	46.8	38.8	66.7	5.74	66.7	66.7	66.3	58.4	50.4	42.4	34.4
	57	71.6	5.17	71.6	71.6	71.1	63.1	55.1	47.2	39.2	66.5	5.74	66.5	66.5	66.3	58.3	50.3	42.3	34.4
3000	72	84.9	5.32	61.9	52.9	44.0	35.0	26.1	-	-	80.5	5.89	60.6	51.7	42.8	33.8	24.9	-	-
	67	79.5	5.25	77.8	68.9	59.9	51.0	42.0	33.1	24.2	74.2	5.83	74.2	67.1	58.2	49.3	40.3	31.4	22.4
	62	73.6	5.19	73.6	73.6	73.6	64.7	55.7	46.8	37.8	67.5	5.76	67.5	67.5	67.5	58.5	49.6	40.6	31.7
	57	73.0	5.18	73.0	73.0	73.0	64.1	55.1	46.2	37.2	67.2	5.76	67.2	67.2	67.2	58.3	49.4	40.4	31.5

RETURN AIR		OUTDOOR AMBIENT TEMPERATURE																	
		105°F									115°F								
		GROSS CAP.[1] MBH	INPUT[2] POWER kW	GROSS SENSIBLE CAPACITY[1], MBH RETURN AIR DRY BULB TEMP. °F							GROSS CAP.[1] MBH	INPUT[2] POWER kW	GROSS SENSIBLE CAPACITY[1], MBH RETURN AIR DRY BULB TEMP. °F						
CFM	WB TEMP °F			86	83	80	77	74	71	68			86	83	80	77	74	71	68
1800	72	67.5	6.47	40.8	35.7	30.6	25.5	20.3	-	-	62.3	7.14	38.6	33.4	28.3	23.2	18.0	-	-
	67	61.4	6.38	52.1	46.9	41.8	36.7	31.5	26.4	21.3	55.8	7.02	49.2	44.0	38.9	33.8	28.6	23.5	18.4
	62	56.3	6.33	56.3	55.4	50.3	45.1	40.0	34.9	29.7	51.8	6.98	51.8	51.0	45.9	40.7	35.6	30.5	25.3
	57	55.9	6.31	55.9	55.0	49.9	44.8	39.6	34.5	29.4	51.1	6.95	51.1	50.2	45.0	39.9	34.8	29.6	24.5
2100	72	70.8	6.51	46.1	40.1	34.0	27.9	21.9	-	-	66.0	7.19	44.1	38.0	32.0	25.9	19.8	-	-
	67	64.4	6.41	58.5	52.6	46.5	40.4	34.4	28.3	22.2	59.1	7.06	55.7	50.0	43.9	37.9	31.8	25.7	19.7
	62	59.1	6.36	59.1	58.7	55.9	49.8	43.7	37.7	31.6	54.8	7.03	54.8	54.4	51.8	45.7	39.7	33.6	27.5
	57	58.6	6.34	58.6	58.2	55.4	49.4	43.3	37.3	31.2	54.0	6.99	54.0	53.6	50.9	44.8	38.8	32.7	26.6
2400	72	74.2	6.55	51.4	44.4	37.4	30.4	23.4	-	-	69.6	7.23	49.6	42.6	35.6	28.6	21.6	-	-
	67	67.4	6.45	64.8	58.2	51.2	44.2	37.2	30.2	23.2	62.3	7.11	62.3	56.0	49.0	42.0	35.0	28.0	21.0
	62	61.9	6.40	61.9	61.9	61.5	54.5	47.5	40.5	33.5	57.9	7.07	57.9	57.9	57.8	50.8	43.8	36.8	29.8
	57	61.4	6.38	61.4	61.4	61.0	54.0	47.0	40.0	33.0	57.0	7.04	57.0	57.0	56.7	49.7	42.7	35.7	28.7
2700	72	74.3	6.56	54.7	46.8	38.8	30.8	22.8	-	-	69.1	7.25	52.5	44.6	36.6	28.6	20.7	-	-
	67	67.6	6.47	66.3	61.0	53.0	45.1	37.1	29.1	21.2	61.8	7.13	61.8	58.3	50.3	42.3	34.4	26.4	18.4
	62	62.1	6.42	62.1	62.1	61.9	53.9	45.9	37.9	30.0	57.4	7.09	57.4	57.4	57.4	49.4	41.4	33.5	25.5
	57	61.5	6.40	61.5	61.5	61.3	53.4	45.4	37.4	29.5	56.6	7.06	56.6	56.6	56.4	48.5	40.5	32.5	24.6
3000	72	74.5	6.58	58.0	49.1	40.2	31.2	22.3	-	-	68.6	7.27	55.4	46.5	37.6	28.6	19.7	-	-
	67	67.8	6.49	67.8	63.9	54.9	46.0	37.0	28.1	19.1	61.4	7.15	61.4	60.6	51.6	42.7	33.7	24.8	15.8
	62	62.2	6.44	62.2	62.2	62.2	53.3	44.3	35.4	26.5	57.0	7.11	57.0	57.0	57.0	48.1	39.1	30.2	21.2
	57	61.7	6.42	61.7	61.7	61.7	52.8	43.8	34.9	25.9	56.1	7.08	56.1	56.1	56.1	47.2	38.3	29.3	20.4

1. These capacities are gross ratings. For net capacity, deduct the supply air blower motor heat, MBH = 3.415 X kW. Refer to the appropriate blower performance table for the KW of the supply air blower motor.
2. These ratings include condenser fan motor and compressor motor power but not the supply air blower motor power.

TABLE 3: BP072 COOLING CAPACITIES (6 TON) - CONTINUED

RETURN AIR		OUTDOOR AMBIENT TEMPERATURE								
		125°F								
		GROSS CAP.[1] MBH	INPUT[2] POWER kW	GROSS SENSIBLE CAPACITY[1], MBH						
				RETURN AIR DRY BULB TEMP. °F						
CFM	WB TEMP °F			86	83	80	77	74	71	68
1800	72	57.2	7.81	36.3	31.2	26.0	20.9	15.8	-	-
	67	50.2	7.66	46.2	41.1	36.0	30.8	25.7	20.6	15.4
	62	47.3	7.64	47.3	46.6	41.5	36.3	31.2	26.1	20.9
	57	46.2	7.59	46.2	45.3	40.2	35.1	29.9	24.8	19.7
2100	72	61.1	7.87	42.1	36.0	29.9	23.9	17.8	-	-
	67	53.7	7.71	53.0	47.5	41.4	35.3	29.3	23.2	17.1
	62	50.6	7.69	50.6	50.2	47.8	41.7	35.6	29.6	23.5
	57	49.5	7.64	49.5	49.0	46.3	40.3	34.2	28.1	22.1
2400	72	65.1	7.92	47.9	40.9	33.9	26.9	19.9	-	-
	67	57.2	7.76	57.2	53.8	46.8	39.8	32.8	25.8	18.8
	62	53.8	7.75	53.8	53.8	53.8	47.0	40.0	33.1	26.1
	57	52.7	7.70	52.7	52.7	52.5	45.5	38.5	31.5	24.5
2700	72	63.8	7.94	50.4	42.4	34.4	26.4	18.5	-	-
	67	56.1	7.79	56.1	55.5	47.6	39.6	31.6	23.6	15.7
	62	52.8	7.77	52.8	52.8	52.8	44.9	37.0	29.0	21.0
	57	51.6	7.72	51.6	51.6	51.5	43.6	35.6	27.6	19.6
3000	72	62.6	7.97	52.8	43.9	35.0	26.0	17.1	-	-
	67	54.9	7.81	54.9	54.9	48.3	39.4	30.4	21.5	12.6
	62	51.8	7.79	51.8	51.8	51.8	42.8	33.9	24.9	16.0
	57	50.6	7.74	50.6	50.6	50.6	41.7	32.7	23.8	14.8

1. These capacities are gross ratings. For net capacity, deduct the supply air blower motor heat, MBH = 3.415 X kW. Refer to the appropriate blower performance table for the KW of the supply air blower motor.
2. These ratings include condenser fan motor and compressor motor power but not the supply air blower motor power.

TABLE 4: BP072 HEATING CAPACITIES

CFM	ID DB	CAP & KW	OUTDOOR AIR TEMPERATURE (°F) (72% RH)							
			-10	0	10	20	30	40	50	60
1800	55	MBH	14.733	23.633	32.534	41.435	50.336	59.237	68.137	77.038
		KW	4.418	4.516	4.614	4.712	4.809	4.907	5.005	5.103
	70	MBH	13.492	22.393	31.293	40.194	49.095	57.996	66.897	75.797
		KW	5.105	5.203	5.301	5.399	5.496	5.594	5.692	5.790
	80	MBH	11.260	20.161	29.062	37.962	46.863	55.764	64.665	73.566
		KW	5.559	5.657	5.755	5.853	5.950	6.048	6.146	6.244
2400	55	MBH	16.565	25.466	34.366	43.267	52.168	61.069	69.969	78.870
		KW	4.043	4.141	4.239	4.337	4.434	4.532	4.630	4.728
	70	MBH	15.348	24.249	33.149	42.050	50.951	59.852	68.752	77.653
		KW	4.737	4.835	4.933	5.031	5.128	5.226	5.324	5.422
	80	MBH	13.007	21.908	30.808	39.709	48.610	57.511	66.411	75.312
		KW	5.159	5.257	5.355	5.453	5.550	5.648	5.746	5.844
3000	55	MBH	17.156	26.057	34.958	43.859	52.759	61.660	70.561	79.462
		KW	3.870	3.968	4.066	4.164	4.261	4.359	4.457	4.555
	70	MBH	15.915	24.816	33.717	42.618	51.519	60.419	69.320	78.221
		KW	4.557	4.655	4.753	4.851	4.948	5.046	5.144	5.242
	80	MBH	13.684	22.584	31.485	40.386	49.287	58.188	67.088	75.989
		KW	5.011	5.109	5.207	5.305	5.402	5.500	5.598	5.696

THE MBH AND KW VALUES DO NOT INCLUDE THE SUPPLY AIR BLOWER MOTOR.
FOR NET CAPACITY, ADD THE SUPPLY AIR BLOWER MOTOR HEAT (MBH = 3.415 X KW)

TABLE 5: SUPPLY AIR BLOWER PERFORMANCE (6 TON BELT DRIVE) - SIDE DUCT APPLICATION

UNIT TONNAGE	AIR FLOW CFM	AVAILABLE EXTERNAL STATIC PRESSURE-IWG[3]													
		0.20		0.30		0.40		0.50		0.60		0.70		0.80	
		RPM	WATTS	RPM	WATTS	RPM	WATTS	RPM	WATTS	RPM	WATTS	RPM	WATTS	RPM	WATTS
6[1, 2]	3200	1150	2325	1182	2425	1212	2525	-	-	-	-	-	-	-	-
	3000	1100	2010	1129	2090	1157	2150	1185	2225	1215	2290	1242	2360	-	-
	2800	1045	1700	1074	1780	1102	1850	1131	1940	1160	2025	1190	2075	1217	2130
	2600	985	1425	1015	1475	1045	1540	1075	1630	1103	1715	1135	1760	1163	1825
	2400	930	1240	958	1300	990	1350	1020	1400	1051	1430	1081	1490	1111	1600
	2200	-	-	905	1070	933	1160	965	1210	997	1250	1028	1285	1060	1325
	2000	-	-	-	-	-	-	919	1025	950	1100	982	1130	1014	1160
	1800	-	-	-	-	-	-	-	-	909	925	939	1005	968	1030

UNIT TONNAGE	AIR FLOW CFM	AVAILABLE EXTERNAL STATIC PRESSURE-IWG[3]													
		0.90		1.00		1.10		1.20		1.30		1.40		1.50	
		RPM	WATTS	RPM	WATTS	RPM	WATTS	RPM	WATTS	RPM	WATTS	RPM	WATTS	RPM	WATTS
6[1, 2]	3200	-	-	-	-	-	-	-	-	-	-	-	-	-	-
	3000	-	-	-	-	-	-	-	-	-	-	-	-	-	-
	2800	1245	2190	-	-	-	-	-	-	-	-	-	-	-	-
	2600	1193	1920	1222	1990	1250	2060	-	-	-	-	-	-	-	-
	2400	1142	1675	1173	1730	1205	1800	1234	1885	-	-	-	-	-	-
	2200	1090	1380	1124	1450	1155	1550	1186	1640	1217	1710	1249	1775	-	-
	2000	1045	1175	1077	1200	1109	1275	1140	1360	1170	1460	1205	1545	1235	1600
	1800	998	1050	1028	1060	1058	1060	1087	1075	1118	1150	1148	1250	1176	1360

1. 230/460/575 Volts
2. For 208 Volts multiply values by 0.95.
3. Includes allowances for a wet evaporator coil, 1” filters, and the heat exchangers. Refer to STATIC RESISTANCE Table for resistance values on applications other than gas / electric units with side duct airflows.

TABLE 6: BELT DRIVE BLOWER MOTOR AND DRIVE DATA

MODEL SIZE	BLOWER RANGE (RPM)	MOTOR[1]		ADJUSTABLE MOTOR PULLEY				FIXED BLOWER PULLEY				BELT (NOTCHED)		
		HP	FRAME	DESIG-NATION	OUTSIDE DIA. (IN.)	PITCH DIA. (IN.)	BORE (IN.)	DESIG-NATION	OUTSIDE DIA. (IN.)	PITCH DIA. (IN.)	BORE (IN.)	DESIG-NATION	PITCH LENGTH (IN.)	QTY.
6 TON	900/1250	1 1/2	56	1VL44	3.1-4.1	2.8-3.8	7/8	AK56	5.4	5.2	1	A36	37.3	1

1. All motors have solid bases and are inherently protected. these motors can be selected to operate into their service factor because they are located in the moving air, upstream of any heating device.

TABLE 7: STATIC RESISTANCES

DESCRIPTION		RESISTANCE, IWG										
		CFM										
		1000	1200	1400	1600	1800	2000	2200	2400	2600	2800	3000
ECONOMIZER[1 3]		0.07	0.08	0.09	0.11	0.13	0.15	0.17	0.20	0.23	0.26	0.30
ELECTRIC HEATERS[1]	7-15KW	0.04	0.05	0.06	0.07	0.08	0.10	0.12	0.14	0.16	0.19	0.22
	20-30KW	0.06	0.07	0.08	0.09	0.11	0.13	0.15	0.17	0.20	0.23	0.26
BOTTOM DUCT CONNECTIONS[1]		0.06	0.07	0.08	0.09	0.10	0.11	0.12	0.14	0.16	0.19	0.22
COOLING ONLY[2]		0.08	0.10	0.12	0.14	0.16	0.18	0.20	0.23	0.26	0.29	0.32

1. Deduct these resistance values from the available external static pressure shown in SUPPLY AIR BLOWER PERFORMANCE Tables.
2. Add these resistance values to the available static resistance values on SUPPLY AIR BLOWER PERFORMANCE Tables.
3. The pressure through the economizer is greater for 100% outdoor air than for 100% return air. If the resistance of the return air duct system is less than 0.25 IWG, the unit will deliver less CFM during full economizer operation.

TABLE 8: ELECTRIC HEATER CFM LIMITATIONS

UNIT MODEL SIZE NOMINAL TONS	VOLTAGE	MINIMUM SUPPLY AIR CFM					
		HEATER SIZE NOMINAL KW					
		5	7	10	15	20	30
6	208/230-1-60	1800	1800	1800	1800	1800	1800
	208/230-3-60	1800	1800	1800	1800	1800	1800
	460-3-60	-	1800	1800	1800	1800	1800
	575-3-60	-	-	1800	1800	1800	1800

TABLE 9: BP 072 ELECTRICAL DATA BELT DRIVE WITHOUT POWERED CONVENIENCE OUTLET

Model Tonnage	Voltage	Compressors		OD Fan Motor FLA	ID Blower Motor FLA	Conv Outlet Amps	Electric Heater Model No.	Heater kW	Heater Amps	Minimum Circuit Ampacity Amps	Max Fuse / BRKR[1] Size
		RLA Each	LRA Each								
6	208-3-60	19.2	146	2.3	5.2	0.0	NONE	0.0	0.0	31.5	40
							2CE04510525[2]	4.0	11.1	45.4	60
							2CE04510725[2]	5.6	15.5	50.9	60
							2CE04511025	8.0	22.2	59.3	70
							2CE04511525	11.9	33.0	72.8	80
							2CE04512025	15.9	44.1	86.7	90
							2CE04513025	22.2	61.6	108.5	110
	230-3-60	19.2	146	2.3	5.2	0.0	NONE	0.0	0.0	31.5	40
							2CE04510525[2]	5.3	12.7	47.4	60
							2CE04510725[2]	7.5	18.0	54.1	60
							2CE04511025	10.6	25.5	63.4	70
							2CE04511525	15.9	38.2	79.3	80
							2CE04512025	21.2	51.0	95.2	100
							2CE04513025	29.6	71.2	120.5	125
	460-3-60	8.3	73	1.3	2.6	0.0	NONE	0.0	0.0	14.3	20
							2CE04510746[2]	6.8	8.2	24.5	30
							2CE04511046[2]	10.1	12.1	29.5	30
							2CE04511546[2]	13.6	16.4	34.7	35
							2CE04512046[2]	19.5	23.5	43.6	45
							2CE04513046[2]	28.8	34.6	57.6	60
	575-3-60	7.1	60	1.0	2.0	0.0	NONE	0.0	0.0	11.9	15
							2CE04511058	10.6	10.2	24.7	25
							2CE04511558	15.9	15.3	31.0	35
							2CE04512058	21.2	20.4	37.4	40
							2CE04513058	30.4	29.3	48.5	50

Note 1: HACR Type per NEC
Note 2: These electric heaters DO NOT include a fuse box. If a fuse box is required to meet a local code (i.e. Chicago), the fuse block accessories shown below are available for field installation.

Fuse Block	2FB04700425 2FB04700546

TABLE 10: BP 072 ELECTRICAL DATA BELT DRIVE WITH POWERED CONVENIENCE OUTLET

Model Tonnage	Voltage	Compressors		OD Fan Motor FLA	ID Blower Motor FLA	Conv Outlet Amps	Electric Heater Model No.	Heater kW	Heater Amps	Minimum Circuit Ampacity Amps	Max Fuse / BRKR[1] Size
		RLA Each	LRA Each								
6	208-3-60	19.2	146	2.3	5.2	10.0	NONE	0.0	0.0	41.5	60
							2CE04510525[2]	4.0	11.1	55.4	70
							2CE04510725[2]	5.6	15.5	60.9	70
							2CE04511025	8.0	22.2	69.3	80
							2CE04511525	11.9	33.0	82.8	90
							2CE04512025	15.9	44.1	96.7	100
							2CE04513025	22.2	61.6	118.5	125
	230-3-60	19.2	146	2.3	5.2	10.0	NONE	0.0	0.0	41.5	50
							2CE04510525[2]	5.3	12.7	57.4	70
							2CE04510725[2]	7.5	18.0	64.1	70
							2CE04511025	10.6	25.5	73.4	80
							2CE04511525	15.9	38.2	89.3	90
							2CE04512025	21.2	51.0	105.2	110
							2CE04513025	29.6	71.2	130.5	150
	460-3-60	8.3	73	1.3	2.6	5.0	NONE	0.0	0.0	19.3	25
							2CE04510746[2]	6.8	8.2	29.5	35
							2CE04511046[2]	10.1	12.1	34.5	35
							2CE04511546[2]	13.6	16.4	39.7	40
							2CE04512046[2]	19.5	23.5	48.6	50
							2CE04513046[2]	28.8	34.6	62.6	70
	575-3-60	7.1	60	1.0	2.0	4.0	NONE	0.0	0.0	15.9	20
							2CE04511058	10.6	10.2	28.7	30
							2CE04511558	15.9	15.3	35.0	40
							2CE04512058	21.2	20.4	41.4	45
							2CE04513058	30.4	29.3	52.5	60

Note 1: HACR Type per NEC

Note 2: These electric heaters DO NOT include a fuse box. If a fuse box is required to meet a local code (i.e. Chicago), the fuse block accessories shown below are available for field installation.

Fuse Block	2FB04700425 2FB04700546

TABLE 11: PHYSICAL DATA

MODELS		BP 072
EVAPORATOR BLOWER	Centrifugal Blower (Dia. x Wd. in.)	12 X 10
	Fan Motor HP (Belt Drive)	1 1/2
EVAPORATOR COIL	Rows Deep	4
	Fins Per Inch	13
	Face Area (Sq. Ft.)	5.1
CONDENSER FANS	Propeller Dia. (in.)	24
	Fan Motor Hp	1/2
	Nom. CFM	4500
CONDENSER COILS	Rows Deep	2
	Fins Per Inch	18
	Face Area (Sq. Ft.)	17.1
COMPRESSOR (Qty. Per Unit)	Scroll Type	1
AIR FILTERS	Quantity Per Unit (15” X 20” X 1” or 2“)	2
	Quantity Per Unit (14” X 25” X 1” or 2“)	1
	Total Face Area (sq. ft.)	6.6
CHARGE	Refrigerant 22 (lbs./oz.)	12/0

TABLE 12: ELECTRIC HEAT CORRECTION FACTORS

NOMINAL VOLTAGE	VOLTAGE	kW CAP. MULTI-PLIER
208	208	1.00
240	230	0.92
480	460	0.92
600	575	0.92

TABLE 13: VOLTAGE LIMITATIONS[1]

POWER SUPPLY	VOLTAGE	
	MIN.	MAX.
208/230-3-60	187	253
460-3-60	414	506
575-3-60	518	506

1. Utilization Range “A” in accordance with ARI Standard 110.

TYPICAL POWER WIRING

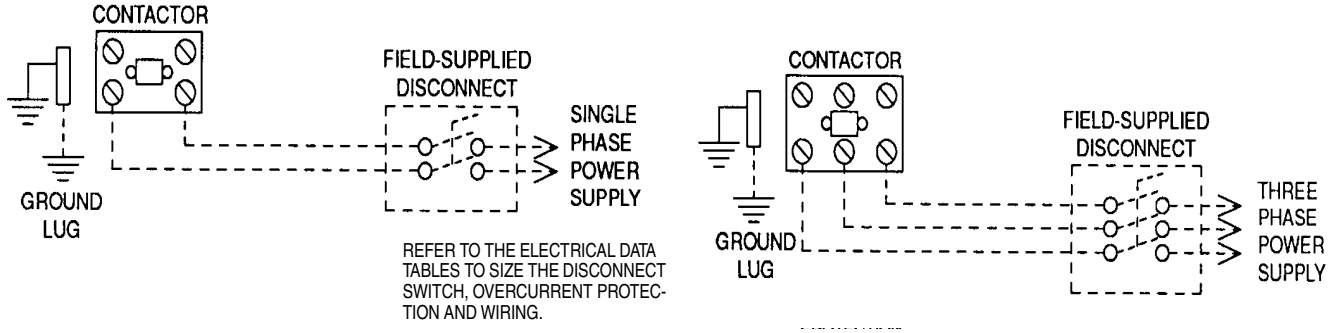

TYPICAL CONTROL WIRING

COOLING / HEATING (24 VOLT THERMOSTAT)

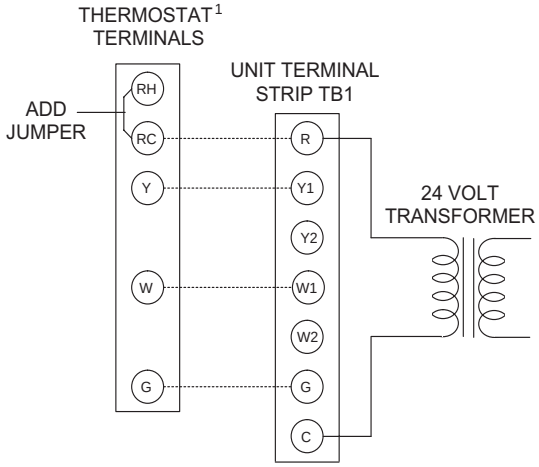

[1]24 VOLT THERMOSTAT 2ET07701024. TO CONTROL THE ECONOMIZER ON THE SECOND STAGE COOLING OR TO HAVE AN ELECTRIC HEAT ACCESSORY WITH TWO STAGES OF HEAT, USE THERMOSTAT 2TH0471024.

COOLING / HEATING (ELECTRONIC THERMOSTAT) MULTI STAGE

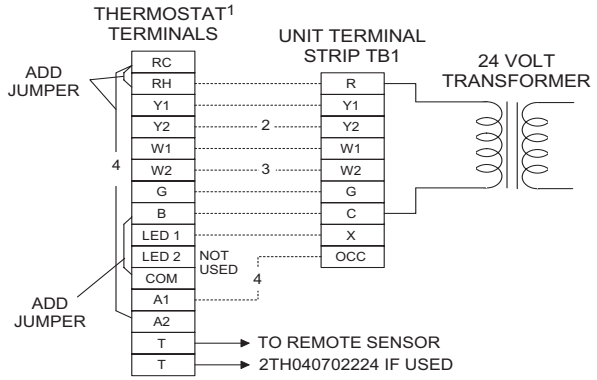

[1] ELECTRONIC PROGRAMMABLE THERMOSTAT 2ET04700224 (INCLUDES SUBBASE).

[2] SECOND STAGE COOLING IS NOT REQUIRED ON UNITS LESS ECONOMIZER.

[3] SECOND STAGE HEATING IS ONLY REQUIRED ON UNITS WITH A TWO STAGE ELECTRIC HEATER.

[4] REMOVE JUMPER J2 FROM TERMINALS 4 AND 9 ON JUMPER PLUG CONNECTOR P6 ON UNITS WITH ECONOMIZER. TERMINALS A1 AND A2 PROVIDE A RELAY OUT-PUT TO CLOSE THE OUTDOOR ECONOMIZER DAMPERS WHEN THE THERMOSTAT SWITCHES TO THE SET-BACK POSITION.

COOLING / HEATING (ELECTRONIC THERMOSTAT) SINGLE STAGE

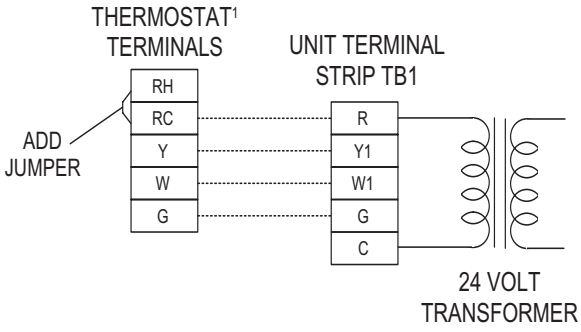

[1]ELECTRONIC PROGRAMMABLE THERMOSTAT 2ET07701024 (INCLUDES SUBBASE). TO CONTROL THE ECONOMIZER ON SECOND STAGE COOLING, USE THERMOSTAT 2TH04700224.

FIGURE 2 - TYPICAL FIELD POWER & CONTROL WIRING

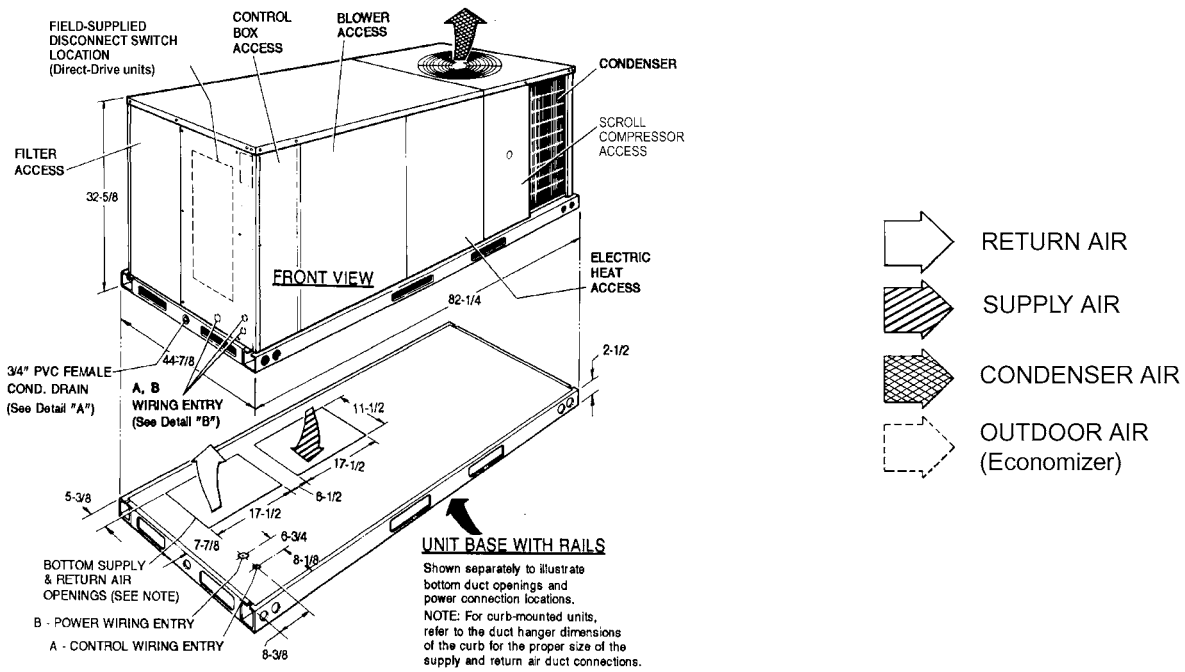

FIGURE 3 - UNIT DIMENSIONS - FRONT VIEW

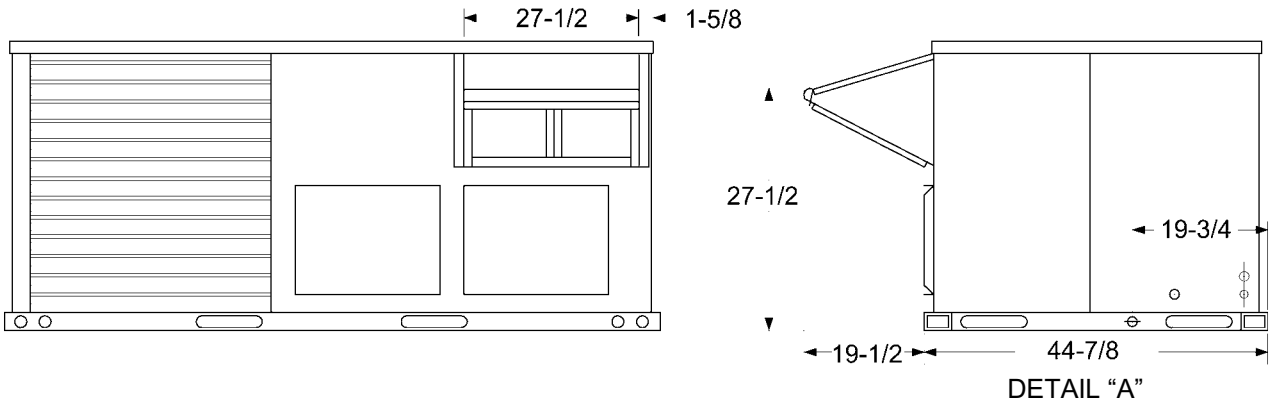

FIGURE 4 - UNIT WITH ECONOMIZER RAINHOOD

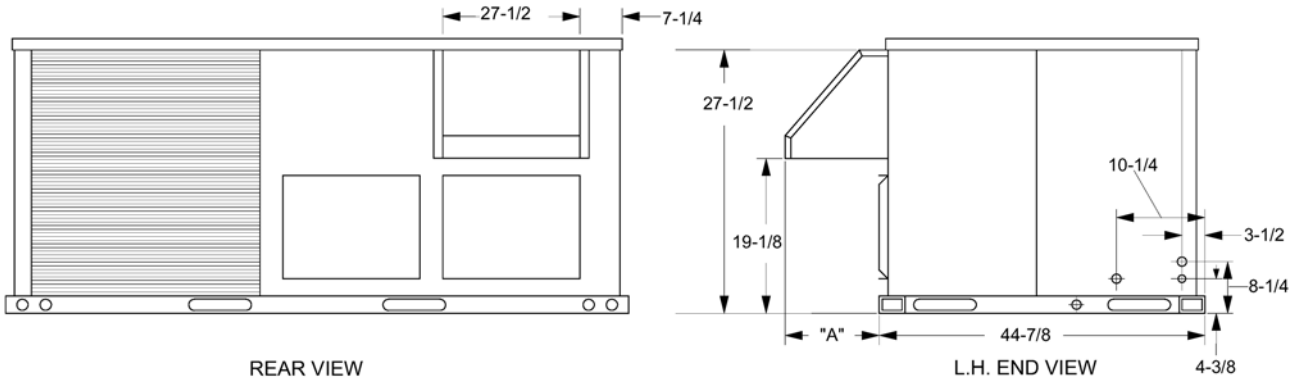

DIMENSION "A"	
FIXED OUTDOOR AIR DAMPER	12
MOTORIZED DAMPER	16-1/2

DETAIL “B”

FIGURE 5 - UNIT WITH FIXED OUTDOOR AIR/MOTORIZED DAMPER RAINHOOD

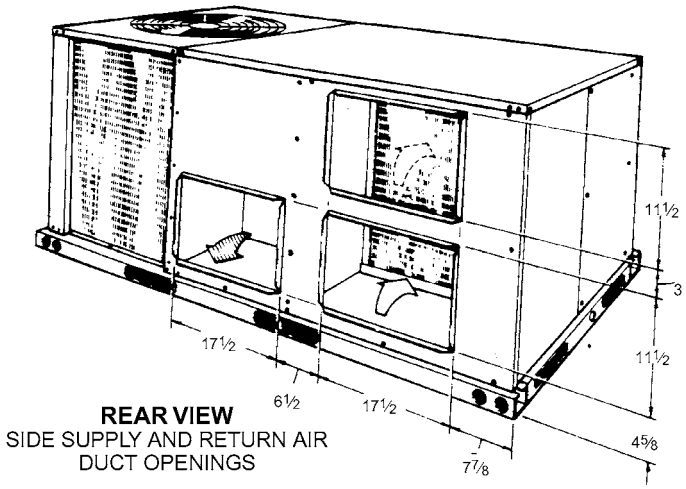

DUCT COVERS - Units are shipped with all air duct openings covered.

For side duct applications;

1. Remove and discard the supply and return air duct covers.
2. Connect ductwork to duct flanges on the rear of the unit.

For bottom duct applications;

1. Remove the side supply air duct cover to gain access to the bottom supply air knockout panel.
2. Remove and discard the bottom knockout panel.
3. Replace the side duct cover.
4. With filter section access panel removed from the unit, remove and discard the bottom return air knockout panel.
5. Replace the filter access panel.

FIGURE 6 - UNIT DIMENSIONS (REAR VIEW)

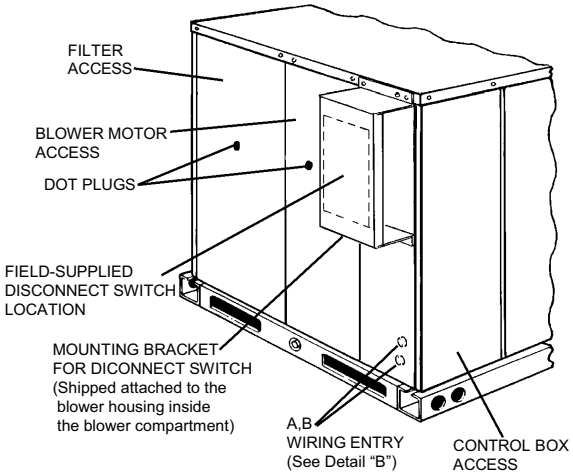

DISCONNECT SWITCH LOCATION AND MOTOR ACCESS PANEL FOR UNIT WITH "BELT-DRIVE" OPTION

FIGURE 7 - DISCONNECT/BLOWER ACCESS LOCATION

TABLE 14: UTILITIES ENTRY

HOLE	OPENING SIZE (DIA.)	USED FOR	
A	7/8" KO[1]	Control Wiring[2]	Side
			Bottom
B	2" KO[1]	Power Wiring	Side
			Bottom
C	1-5/8" KO	Gas Piping (Front)	
D	1-1/2" KO	Gas Piping (Bottom)	

1. Opening in the bottom to the unit can be located by the side in the insulation.
2. Do not remove the 2" knockout ring.

TABLE 15: MINIMUM CLEARANCES

LOCATION	CLEARANCE
Front	24" (Cooling/Electric Heat) 32" (Gas Heat)
Rear	12" (Less Economizer) 36" (With Economizer or Fixed Air/Motorized Damper)
Left Side (Filter Access)	24" (Less Economizer) 36" (With Economizer)
Right Side (Cond. Coil)	24"
Below Unit[1]	0"
Above Unit[2]	72" (For Condenser Air Discharge)

1. Units may be installed on combustible floors made from wood or class A, B, or C roof covering material.
2. Units must be installed outdoors. Overhanging structures or shrubs should not obstruct condenser air discharge outlet.

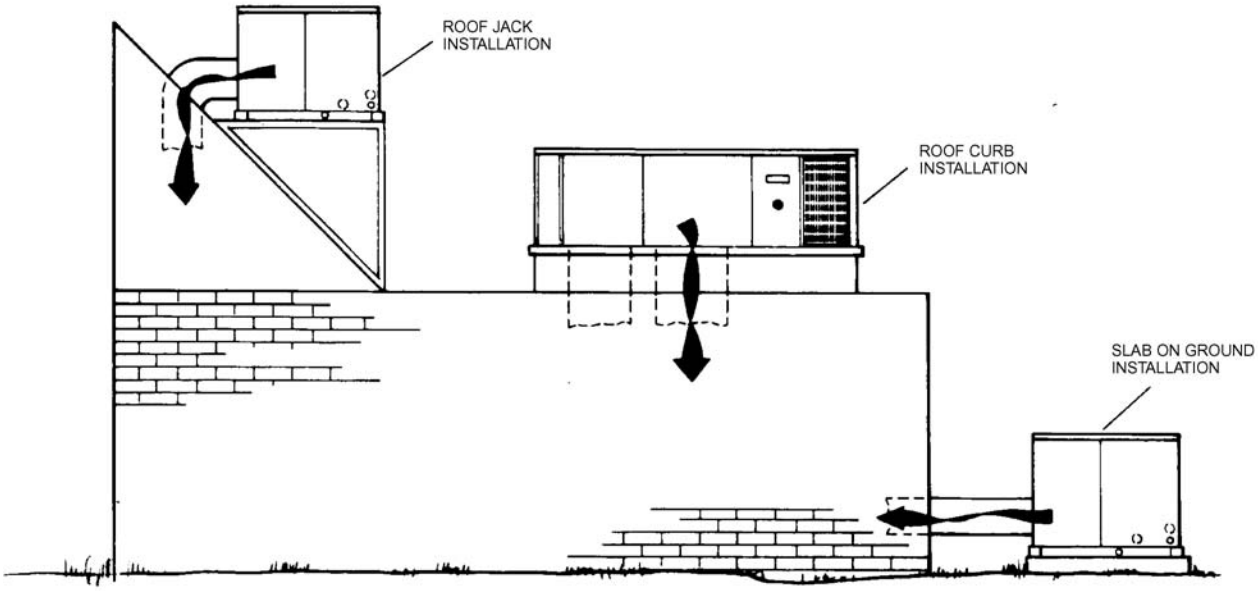

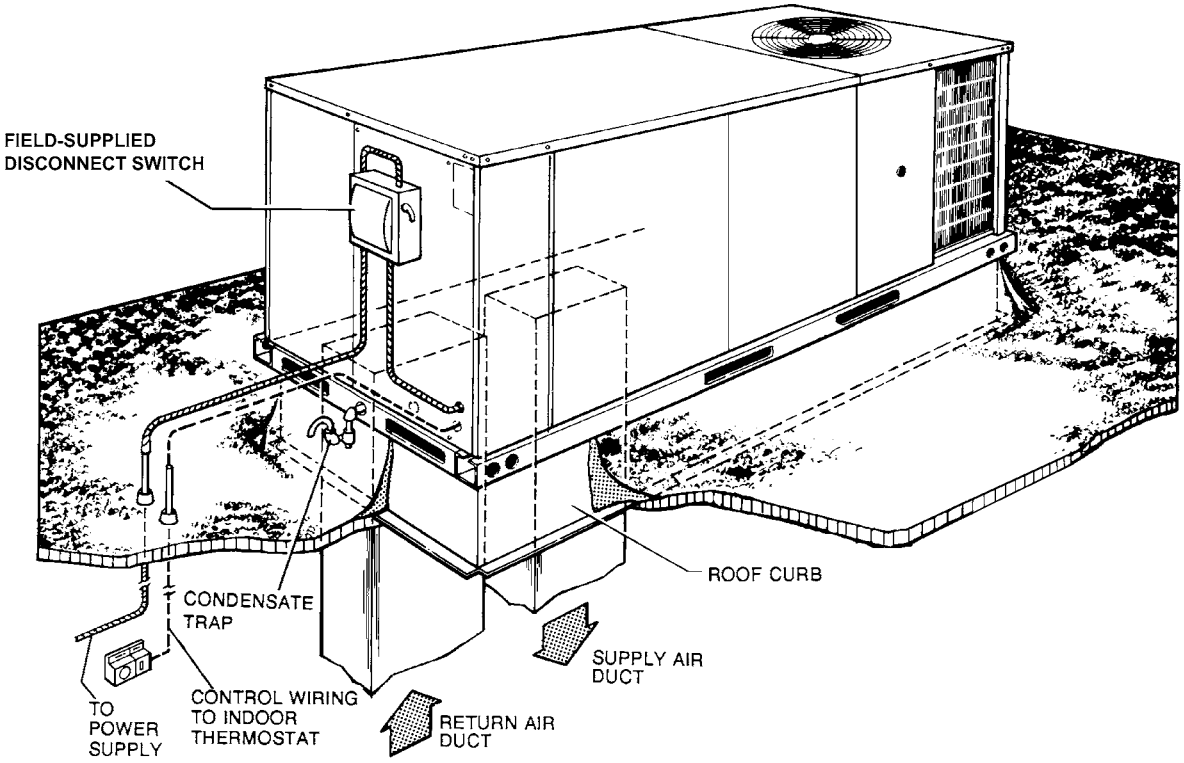

FIGURE 8 - TYPICAL APPLICATIONS

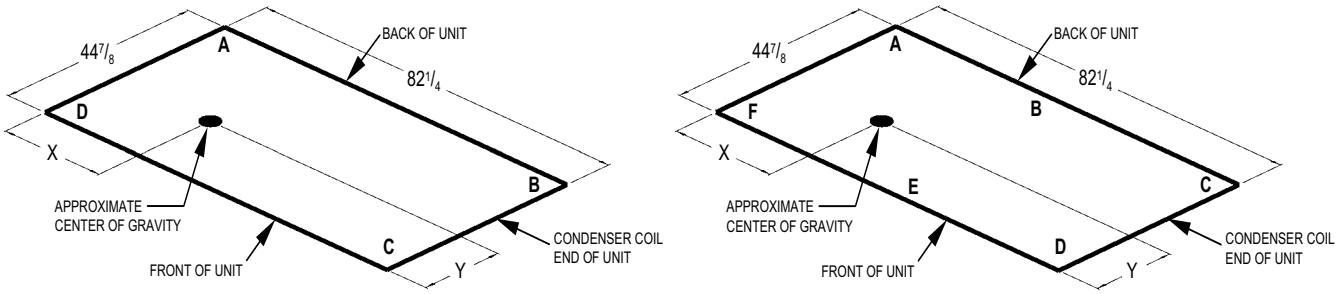

FIGURE 9 - FOUR AND SIX POINT LOADING

TABLE 16: BP 4 POINT LOADS WEIGHT DISTRIBUTION

UNIT	TOTAL	A	B	C	D
BP072	612	136	133	170	173

TABLE 17: BP 6 POINT LOADS WEIGHT DISTRIBUTION

UNIT	TOTAL	A	B	C	D	E	F
BP072	612	91	90	89	113	114	116

TABLE 18: CENTER OF GRAVITY

DIMENSION	3 - 5 TON
X	40-¾”
Y	19-¾”

TABLE 19: OPERATING WEIGHTS (LBS.)

MODEL SIZE			6 TON
BASIC UNIT	BP		612
OPTIONS	Economizer		50
	Motorized Damper		26
	Electric Heater	5 - 7 kW	18
		10 - 15 kW	23
		20 - 30 kW	28
ACCY.	Roof Curb		92
	Barometric Relief / Fixed Air Damper		10

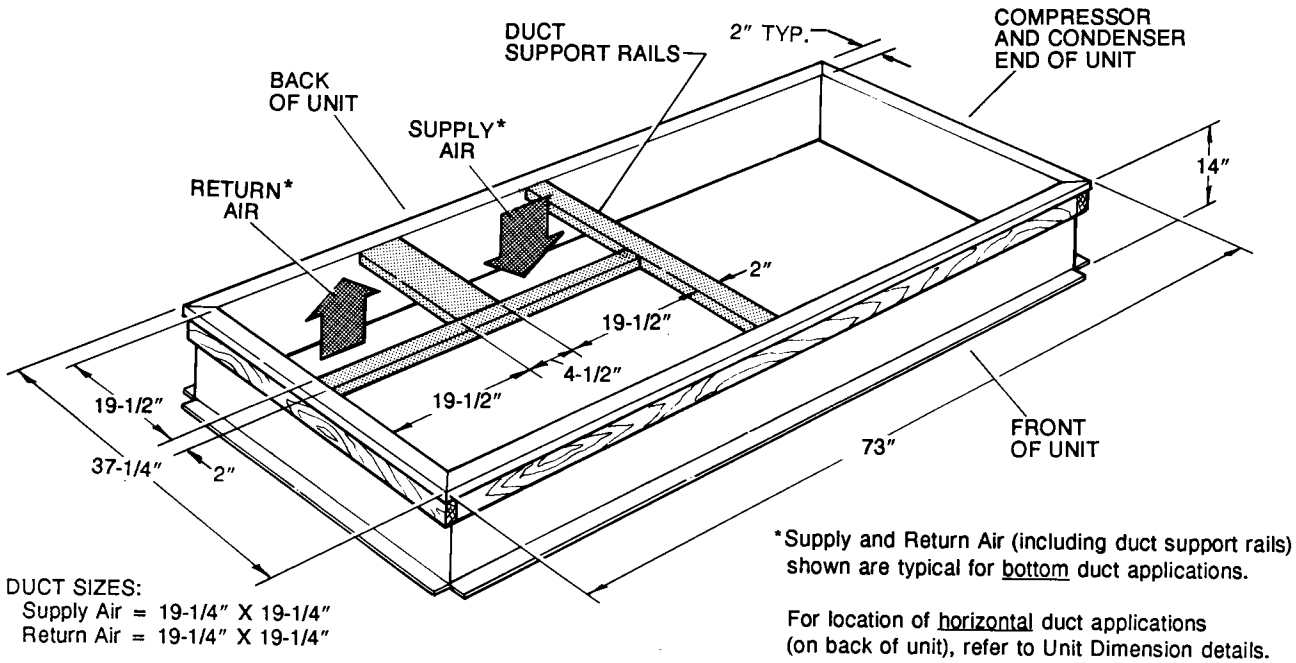

FIGURE 10 - ROOF CURB DIMENSIONS

GUIDE SPECIFICATIONS

GENERAL

Units shall be manufactured by York International Unitary Products Group in an ISO 9001 certified facility.

York's Sunline 2000™ units are convertible single package heat pumps. Although the units are primarily designed for curb mounting on a roof, they can also be slab-mounted at ground level or set on steel beams above a finished roof. Models are available with a wide variety of factory-mounted options and field-installed accessories to make them suitable for almost every application. All units are self-contained and assembled on full perimeter base rails with holes in the four corners for overhead rigging. Every unit is completely piped, wired, charged and tested at the factory to simplify the field installation and to provide years of dependable operation. All models (including those with an economizer) are suitable for either bottom or horizontal duct connections. Models with power exhaust are suitable for bottom duct connections only. For bottom duct, remove the sheet metal panels from the supply and return air openings through the base of the unit. For horizontal duct, remove the supply and return air panels on the rear of the unit.

All non-Scroll compressors include crankcase heaters and all compressors have internal pressure relief. Every refrigerant circuit includes a liquid line filter-drier, a discharge line high pressure switch and a suction line with a freezestat and low pressure/loss of charge switch.The unit control circuit includes a 75 VA transformer, a 24-volt circuit breaker and a relay board with a compressor lockout circuit, a terminal strip for thermostat wiring, plus an additional set of pin connectors to simplify the interface of additional field controls. All units have long lasting powder paint cabinets with 750 hour salt spray test approval under ASTMB117 procedures. All models are CSA listed. All models include a 1-year limited warranty on the complete unit. Compressors and electric heater elements carry a 5-year warranty.

DESCRIPTION

Units shall be factory-assembled, single packaged heat pumps designed for outdoor mounted installation.

The units shall have minimum EER ratings of 10.2. They shall have built-in field convertible duct connections for down discharge supply/return or horizontal discharge supply/return, and be available with factory installed options or field installed accessories. The units shall be factory wired, piped, charged with R-22 refrigerant and factory tested prior to shipment. All unit wiring shall be both numbered and color coded. All units the cooling performance shall be rated in accordance with DOE and ARI test procedures. Units shall be CSA listed, classified to ANSI Z21.47, UL 1995/CSA No. 236 standards.

UNIT CABINET

Unit cabinet shall be constructed of G90 galvanized steel, with exterior surfaces coated with a non-chalking, powdered paint finish, certified at 750 hours salt spray test per ASTMB117 standards. Indoor blower section shall be insu-

lated with a minimum 1/2” thick insulation, coated on the air-side. Aluminum foil faced insulation shall be used in the furnace compartment and be fastened with ridged fasteners to prevent insulation from entering the air stream. Cabinet panels shall be “large” size, easily removable for servicing and maintenance. Full perimeter base rails shall be provided to assure reliable transit of equipment, overhead rigging and proper sealing on roof curb applications. Disposable 1" filters shall be furnished and be accessible through a removable access door, sealed airtight. Units filter track shall be designed to accommodate either 1” or 2” filters. Fan performance measuring ports shall be provided on the outside of the cabinet to allow accurate air measurements of evaporator fan performance without removing panels or creating air bypass of the coils. Condensate pan shall be internally sloped and conform to ASHRAE 62-89 self-draining standards. Condensate connection shall be a minimum of 3/4” I.D. female and be a ridged mount connection.

INDOOR (EVAPORATOR) FAN ASSEMBLY

The indoor fan shall be a factory installed belt drive assembly that includes an adjustable pitch motor pulley. Job site selected (B.H.P.) brake horsepower shall not exceed the motors nameplate horsepower rating, plus the service factor. Units shall be designed not to operate above service factor. Fan wheel shall be double-inlet type with forward-curved blades, dynamically balanced to operate smoothly throughout the entire range of operation. Airflow design shall be constant air volume. Bearings shall be sealed and permanently lubricated for longer life and no maintenance.

OUTDOOR (CONDENSER) FAN ASSEMBLY

The outdoor fan shall be of the direct-driven propeller type, discharge air vertically, have aluminum blades riveted to a corrosion resistant steel spider bracket and shall be dynamically balanced for smooth operation. The outdoor fan motor shall be totally enclosed with permanently lubricated bearings, internally protected against overload conditions and staged independently.

REFRIGERANT COMPONENTS

Compressor:

a. Shall be internally protected with internal high-pressure relief and over temperature protection.

b. Shall have internal spring isolation and sound muffling to minimize vibration and noise, and be externally isolated on a dedicated, independent mounting.

Coils:

a. Evaporator and condenser coils shall have aluminum plate fins mechanically bonded to seamless internally enhanced copper tubes with all joints brazed. Special Phenolic coating shall be available as a factory option.

b. Evaporator and Condenser coils shall be of the direct expansion, draw-thru, design.

Refrigerant Circuit and Refrigerant Safety Components shall include:

a. Independent fixed-orifice expansion devices.

b. Filter drier/strainer to eliminate any moisture or foreign matter.

c. Accessible service gage connections on both suction and liquid lines to charge, evacuate, and measure refrigerant pressure during any necessary servicing or troubleshooting without losing charge.

d. The refrigeration system shall provide at least 15°F of sub-cooling at design conditions.

UNIT CONTROLS

a. Unit shall be complete with self-contained low-voltage control circuit protected by a resetable circuit breaker on the 24-volt transformer side.

b. Unit shall incorporate a lockout circuit which provides reset capability at the space thermostat or base unit, should any of the following standard safety devices trip and shut off compressor.

c. Loss-of-charge/Low-pressure switch.

d. High-pressure switch.

e. Freeze-protection thermostat, evaporator coil.

f. If any of the above safety devices trip, a LED (light-emitting diode) indicator shall flash a diagnostic code that indicates which safety switch has tripped.

g. Unit shall incorporate “AUTO RESET” compressor over temperature, over current protection.

h. Unit shall operate with conventional thermostat designs and have a low voltage terminal strip for easy hook-up.

i. Unit control board shall have on-board diagnostics and fault code display.

j. Standard controls shall include anti-short cycle and low voltage protection, and permit cooling operation down to 0°F.

k. Control board shall monitor each refrigerant safety switch independently.

l. Control board shall retain last 5 fault codes in non volatile memory, which will not be lost in the event of a power loss.

ELECTRIC HEATING SECTION

An electric heating section, with nickel chromium elements, shall be provided in a range of 5 thru 30 KW, offering two stages of capacity - 16 KW and above on 208/230 volt heaters and 20 KW and above on 460 and 575 volt heaters. The heating section shall have a primary limit control(s) and auto-

matic reset to prevent the heating element system from operating at an excessive temperature. The heating section assembly shall slide out of the unit for easy maintenance and service. Units with Electric Heating shall be wired for a single point power supply with branch circuit fusing (where required).

UNIT OPERATING CHARACTERISTICS

a. Unit shall be capable of starting and running at 125°F outdoor temperature, exceeding maximum load criteria of ARI Standard 210/240. The compressor, with standard controls, shall be capable of operation down to 0°F outdoor temperature. Unit shall be provided with fan time delay to prevent cold air delivery before heat exchanger warms up (Gas heat only).

ELECTRICAL REQUIREMENTS

All unit power wiring shall enter unit cabinet at a single factory provided location and be capable of side or bottom entry, to minimize roof penetrations and avoid unit field modifications. Separate side and bottom openings shall be provided for the control wiring.

STANDARD LIMITED WARRANTIES

- Compressor 5 Years
- Electric Heat Element 5 Years
- Other Parts 1 Year

OPTIONAL OUTDOOR AIR (Shall be made available by either/or):

- **ELECTRONIC ENTHALPY AUTOMATIC ECONOMIZER**- Outdoor and return air dampers that are interlocked and positioned by a fully-modulating, spring return damper actuator. The maximum leakage rate for the outdoor air intake dampers shall not exceed 2% when dampers are fully closed and operating against a pressure differential of 0.5 IWG. A unit-mounted potentiometer shall be provided to adjust the outdoor and return air damper assembly to take in CFM of outdoor air to meet the minimum ventilation requirement of the conditioned space during normal operation. During economizer operation, a mixed-air temperature control shall modulate the outdoor and return air damper assembly to prevent the supply air temperature from dropping below 55°F. Changeover from compressor to economizer operation shall be provided by an integral electronic enthalpy control that feeds input into the basic module. The outdoor intake opening shall be covered with a rain hood that matches the exterior of the unit. Water eliminator/filters shall be provided. Simultaneous economizer/compressor operation is also possible. Dampers shall fully close on power loss.
- **MOTORIZED OUTDOOR AIR DAMPERS** - Outdoor air dampers are positioned by a 2-position, spring-return damper actuator. The maximum leakage rate for the outdoor air intake dampers shall not exceed 2% when dampers are fully closed and operating against a pressure differential of 0.5 IWG. A unit-mounted potentiometer shall be provided to adjust the outdoor damper assembly to take in the design CFM of outdoor air to meet the ventilation requirements of the conditioned space during normal operation. Whenever the indoor fan motor is energized, the dampers open up to one of two pre-selected positions - regardless of the outdoor air enthalpy. Dampers return to the fully closed position when the indoor fan motor is de-energized. Dampers shall fully close on power loss.

OTHER PRE-ENGINEERED ACCESSORIES AVAILABLE

- **ROOF CURB** - 14"and 8” high, full perimeter curb with wood nailer (shipped knocked-down).
- **BAROMETRIC RELIEF DAMPER** - Contains a rain hood, air inlet screen, exhaust damper and mounting hardware. Used to relieve internal air pressure through the unit.
- **ELECTRIC HEATERS**
- **ECONOMIZER/MOTORIZED DAMPER RAIN HOOD** - Contains all hood panels and the hardware for assembling.
- **MANUAL OUTDOOR AIR DAMPER**
- **COIL GUARD KIT** - Guard for cooling coil.
- **HAIL GUARD**

OTHER FACTORY INSTALLED OPTIONS

- **POWER EXHAUST OPTION** - To work in conjunction with economizers.
- **TECHNICOAT PHENOLIC COATED CONDENSER AND EVAPORATOR COIL**
- **ELECTRONIC SINGLE ENTHALPY ECONOMIZER**
- **DIRTY FILTER SWITCH**
- **PHASE MONITOR**
- **COIL GUARD**
- **POWERED GFI CONVENIENCE OUTLET**
- **NON-POWERED GFI CONVENIENCE OUTLET**

- **BAS CONTROLS (Simplicity® INTELLI-Comfort™, CPC, JOHNSON, HONEYWELL, NOVAR)**
- **BAS READY ECONOMIZER (BELIMO ACTUATOR WITHOUT A CONTROLLER)**
- **HINGED FILTER DOOR ACCESS AND TOOLESS ACCESS PANELS**
- **STAINLESS STEEL DRAIN PAN**
- **BOTTOM DRAIN CONNECTION**
- **2" PLEATED FILTERS**
- **DISCONNECT SWITCH**
- **SUPPLY AIR SMOKE DETECTOR**
- **RETURN AIR SMOKE DETECTOR**

Subject to change without notice. Printed in U.S.A.
Copyright © 2004 by Unitary Products Group. All rights reserved.

036-21630-001-B-0904
Supersedes: 036-21630-001-A-0704

Unitary Products Group | **5005 York Drive** | **Norman OK 73069**